hansgrohe

Xevolos E
61098450
61099450

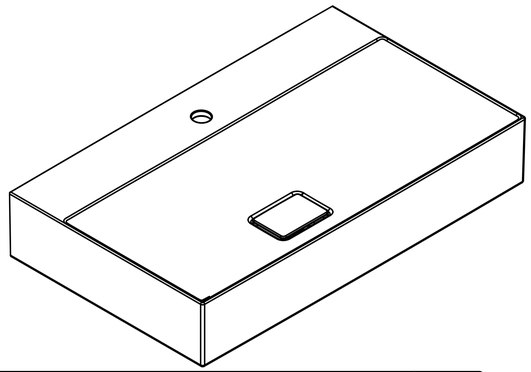

Basin outline: 480 x 800 mm

Cut out: 455 x 750 mm

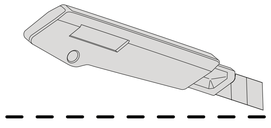

0 20 40 60 80 100 mm