Product information sheet BLANCODANA 6

Item no. 525323

Benefits



- Spacious, convenient single bowl
- Practical continuous tap ledge
- Attractive modern design
- 3 ½'' basket strainer

Scope of supply

- waste kit with space-saving pipe
- 3 ½'' basket strainer

Details

Min cabinet size	600 mm

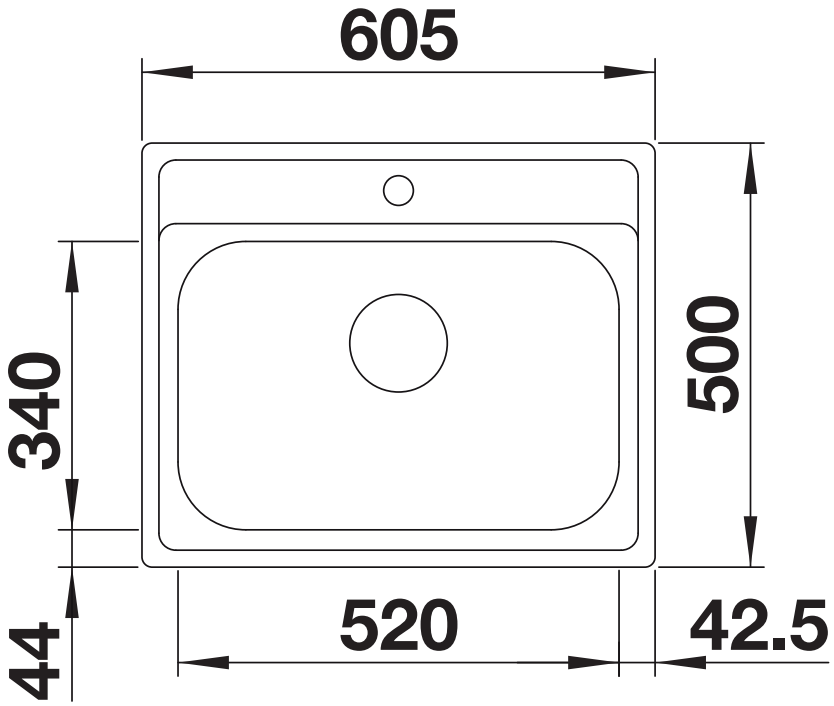

Top view

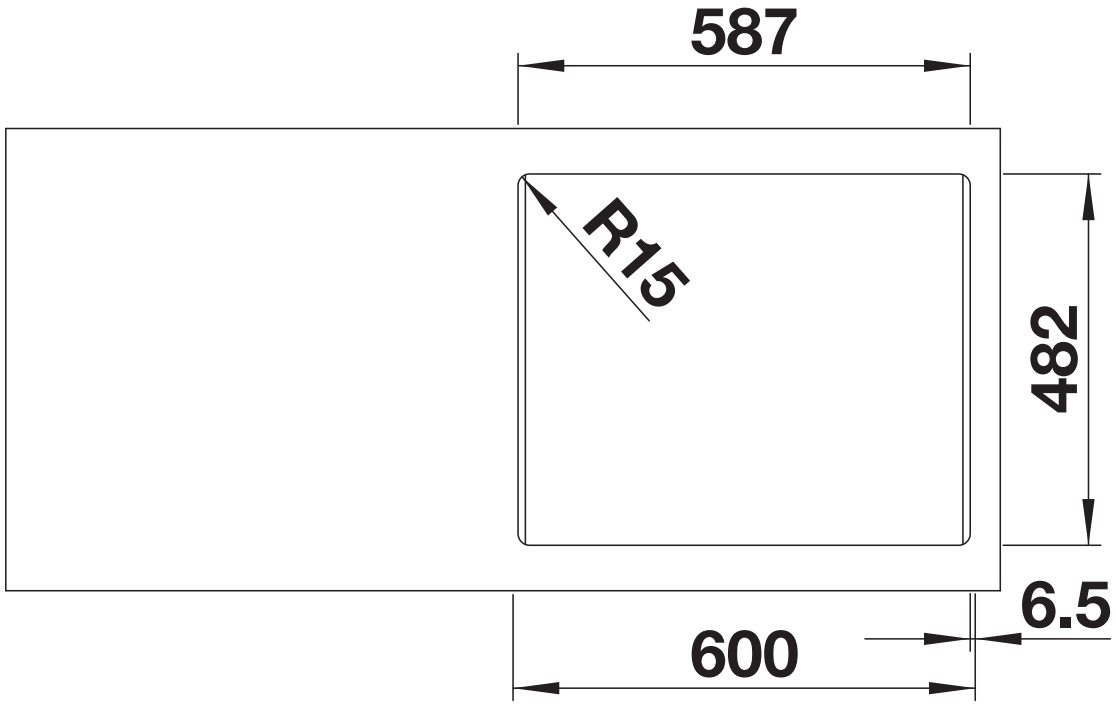

Cut-out

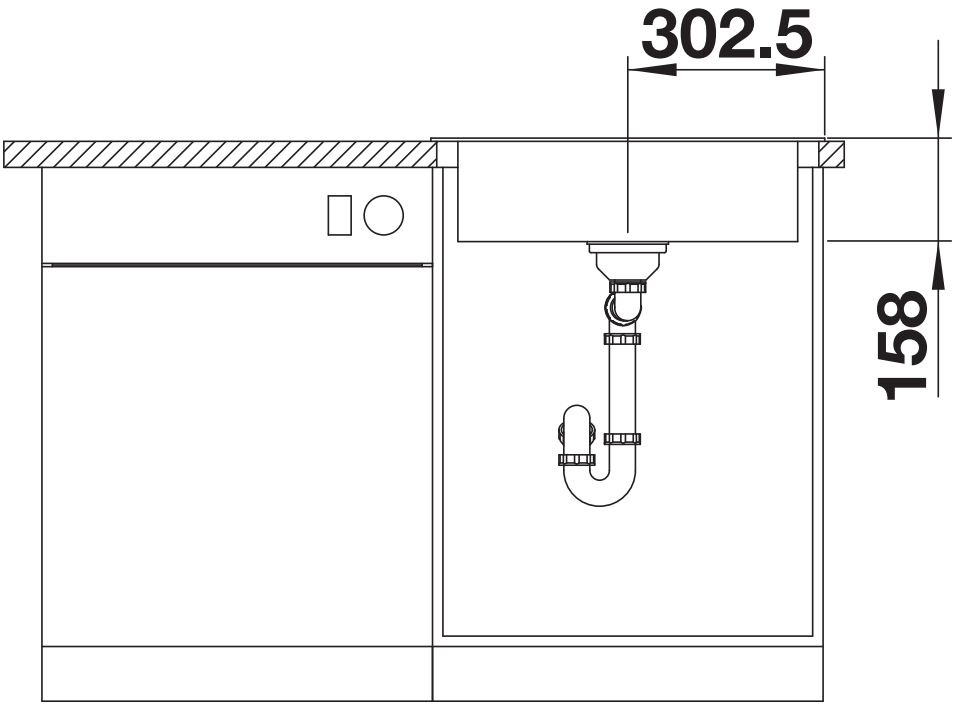

Front view

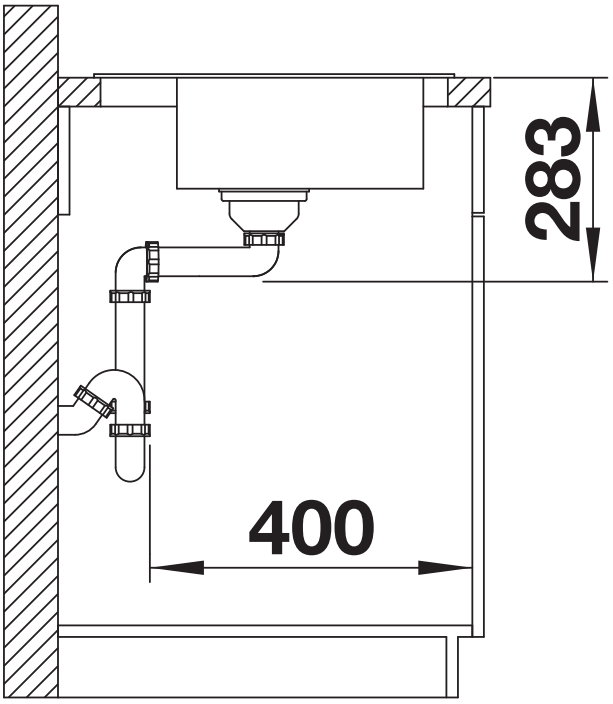

Side view