Product information sheet CLARON 400-U

Item no. 521573

Benefits



- Elegant-pure bowl design
- Concise 10 mm radius for a more refined design, without doing away with practical benefits
- Optimum utilisation of the bowl capacity thanks to extra-deep bowls and distinctively small radii
- InFino drain system – elegantly integrated and easy-care

Planning information

- Please order drain connections for combinations of two individual bowls separately

Scope of supply

- waste kit with space saving pipe
- 3 ½'' InFino basket strainer
- fixing kit

Details

Min cabinet size 450 mm

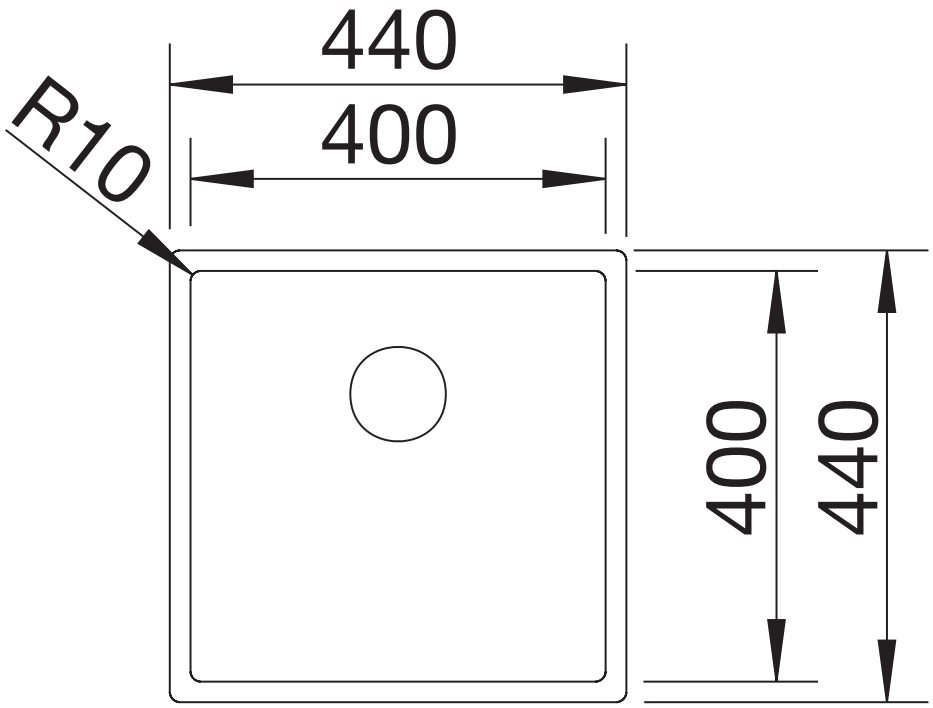

Top view

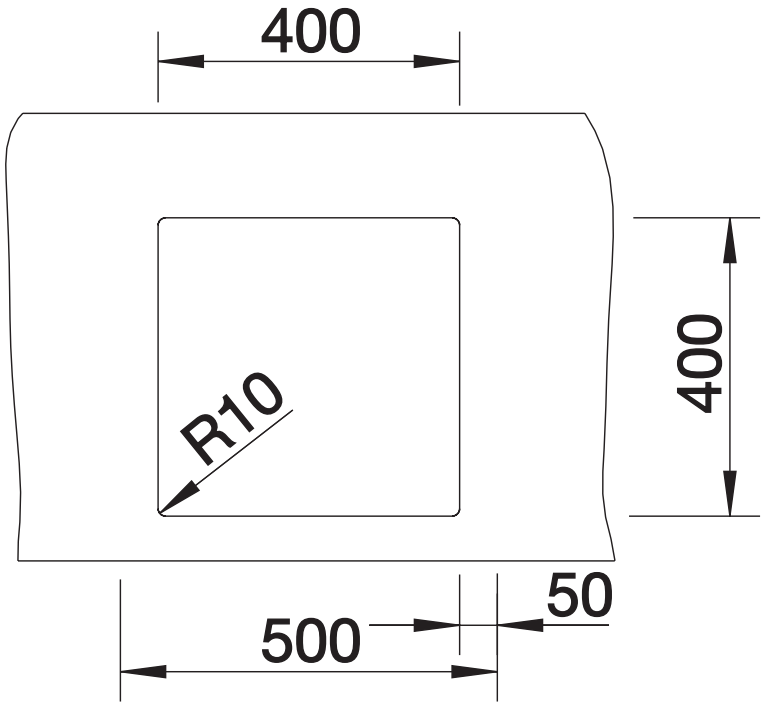

Cut-out