Product information sheet CLARON 340/180-IF

Item no. 521607

Benefits



- Elegant-pure bowl design without visible base pattern
- Concise 10 mm radius for a more refined design, without doing away with practical benefits
- Optimum utilisation of the bowl capacity thanks to extra-deep bowls and distinctively small radii
- Flush IF - flat rim
- InFino drain system – elegantly integrated and easy-care

Planning information

- Installing a kitchen mixer tap, drain remote control or soap dispenser in laminate worktops requires a flexible sealing tape

Scope of supply

- waste kit with space saving pipe
- waste connection
- 2 x 3 ½'' InFino basket strainer
- fixing kit

Details

Min cabinet size	600 mm

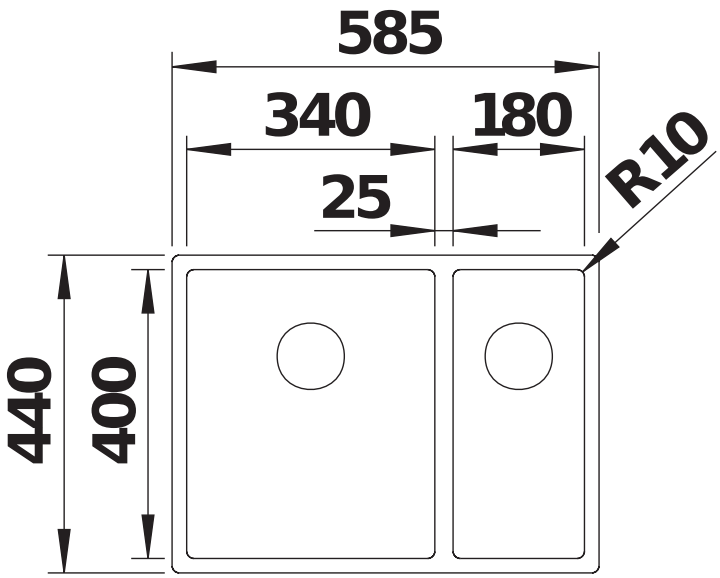

Top view

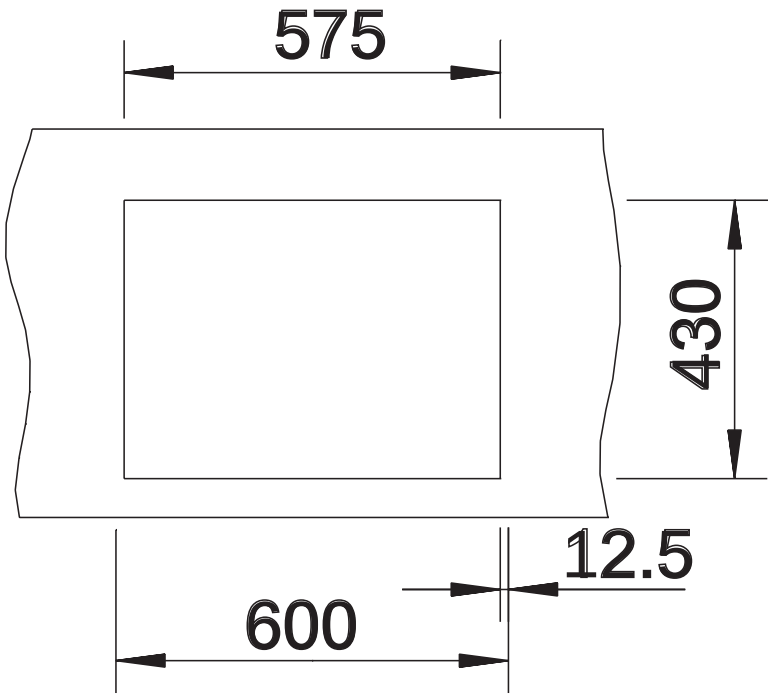

Cut-out

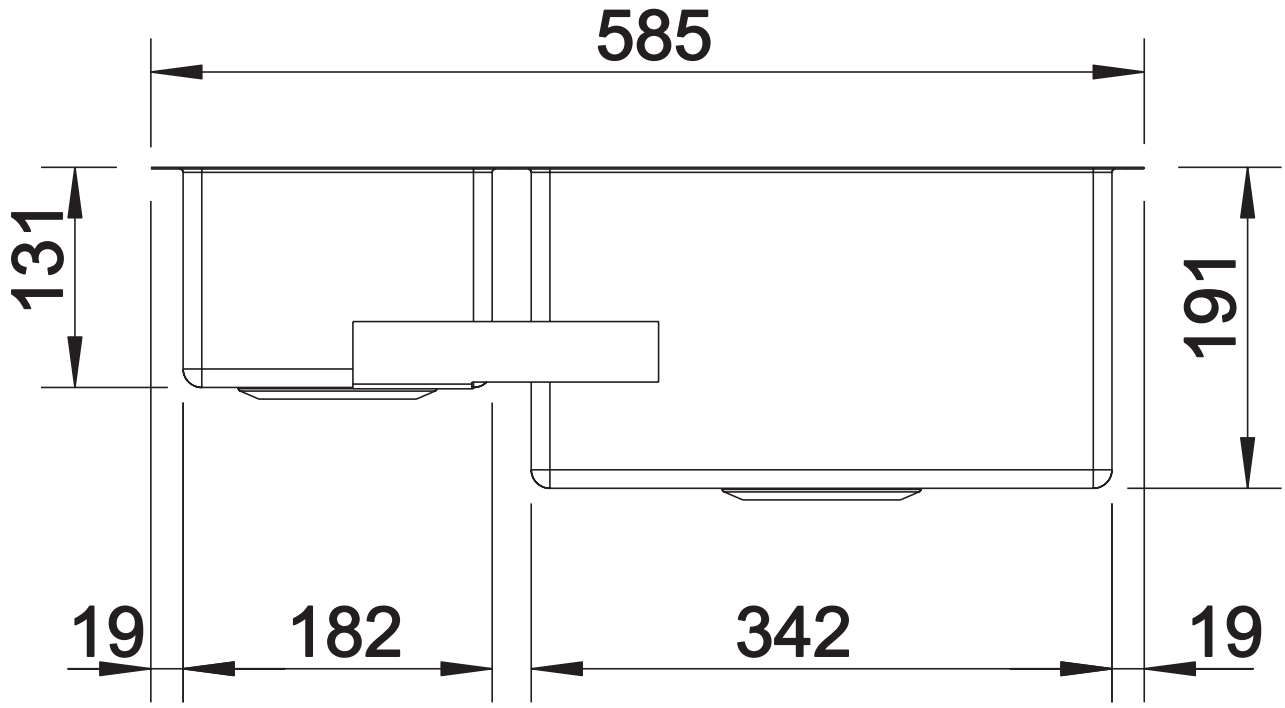

Front view

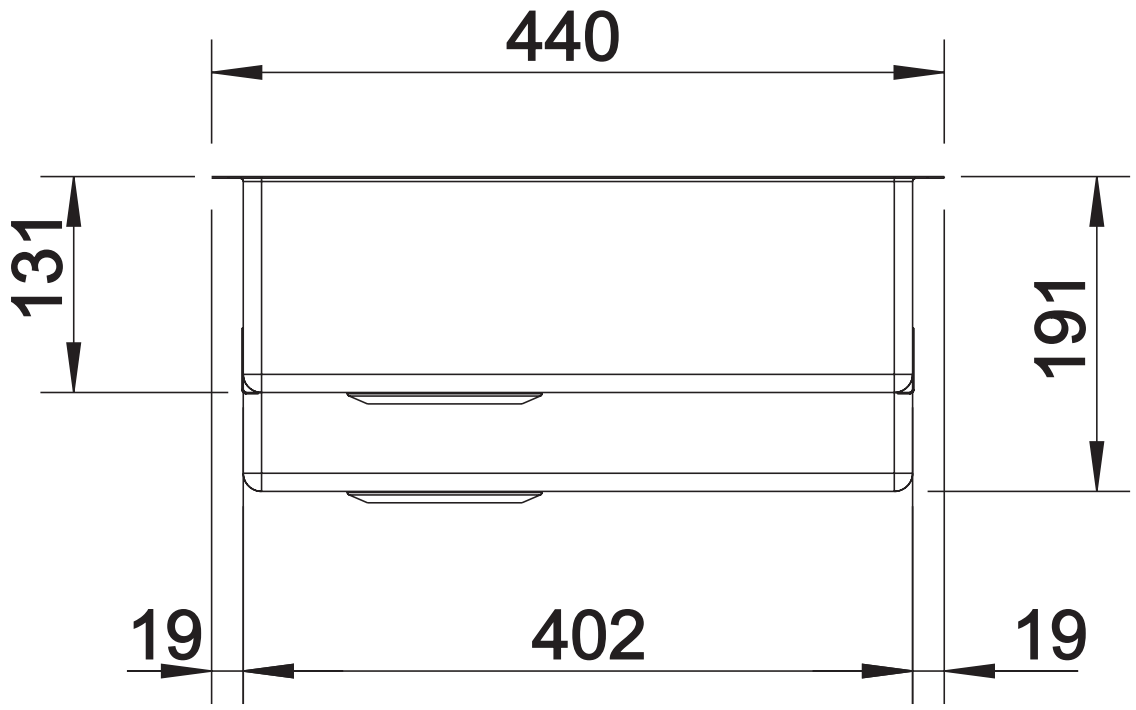

Side view