Product information sheet AXIA III XL 6 S-F

Item no. 527236

Benefits



- Smooth, ergonomic work flow along two axis
- Design that is notable for clear lines and the ultra-narrow rim
- Tight radii for maximum utilisation of the surface and volume
- Movable cutting board for working directly into cooking dishes
- Spacious bowl size and beautifully integrated, practical drainer groove
- High-quality features with drain remote control, covered C-overflow and InFino drain system – elegantly integrated and easy-care

Colours



Available colours:

rock grey
anthracite
coffee
white
black
soft white
volcano grey

SILGRANIT volcano grey

Scope of supply

- movable safety glass cutting board
- waste kit with space-saving pipe
- 3 ½'' InFino basket strainer with drain remote control (rotary switch)

Details

Min cabinet size	600 mm

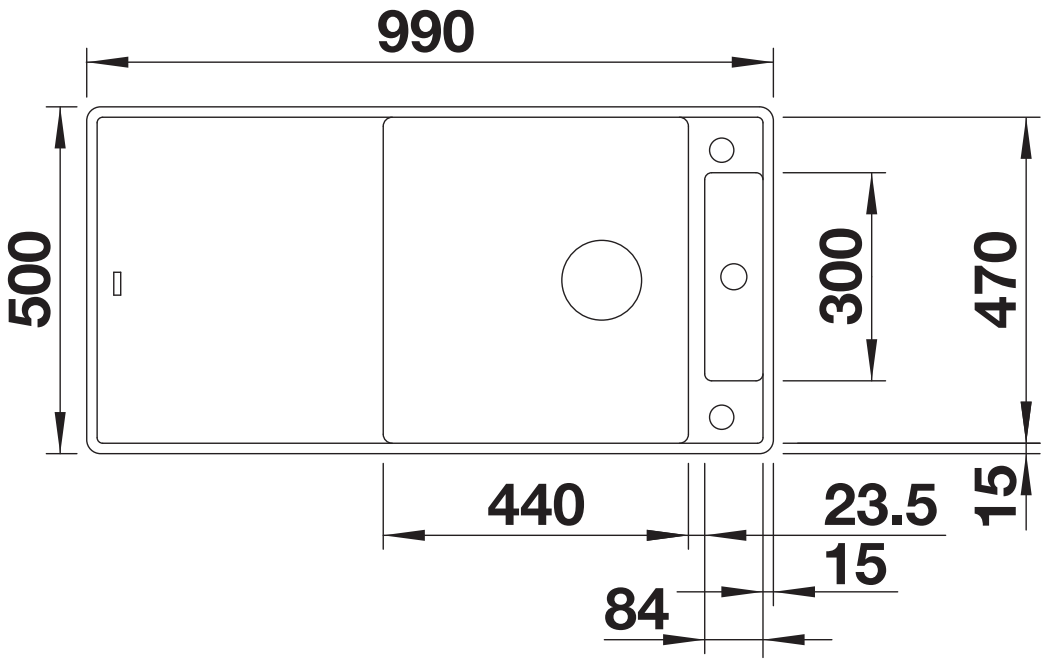

Top view

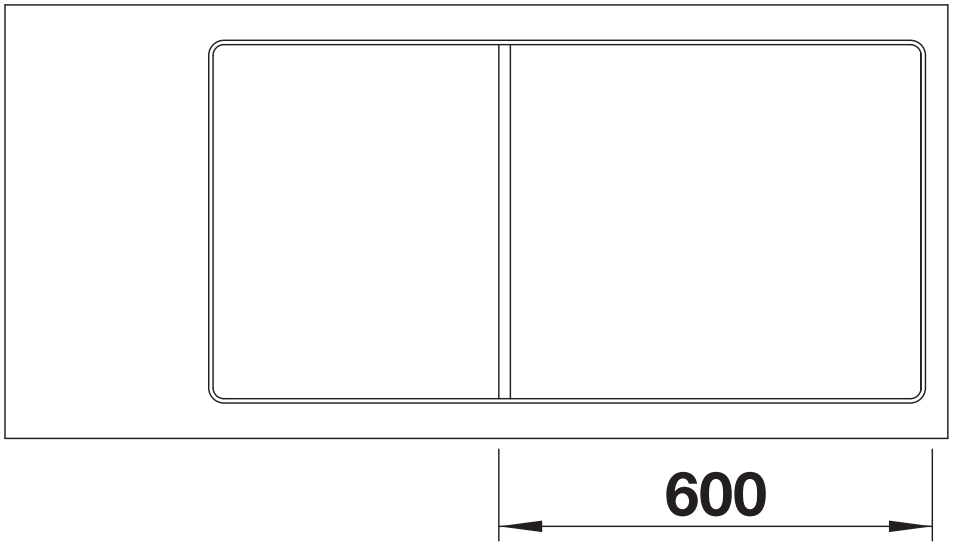

Cut-out

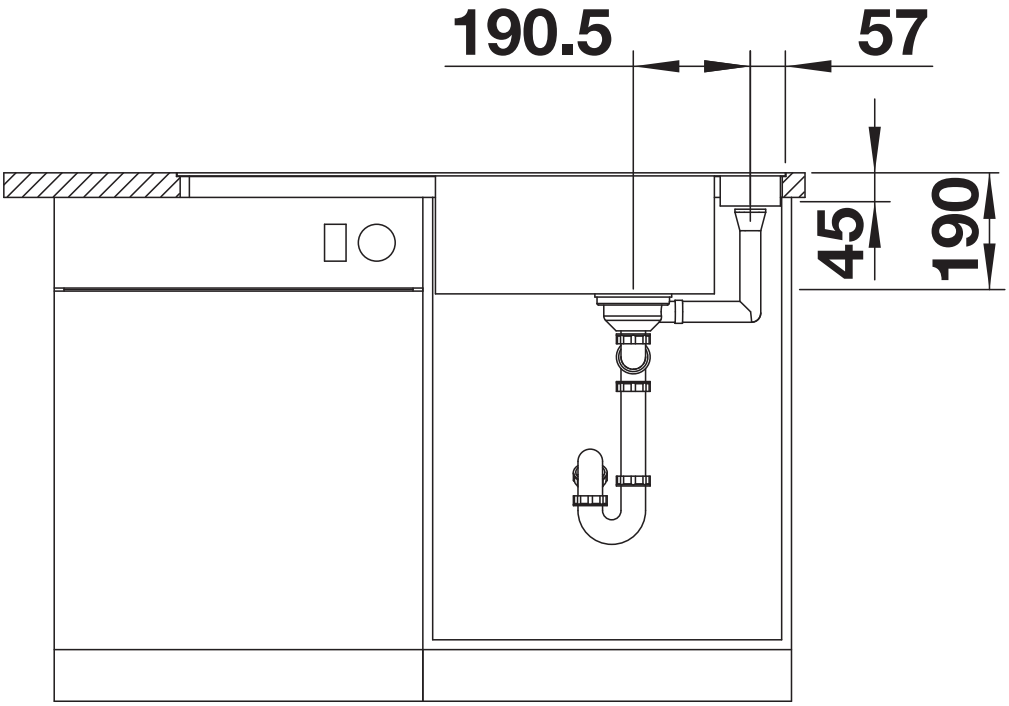

Front view

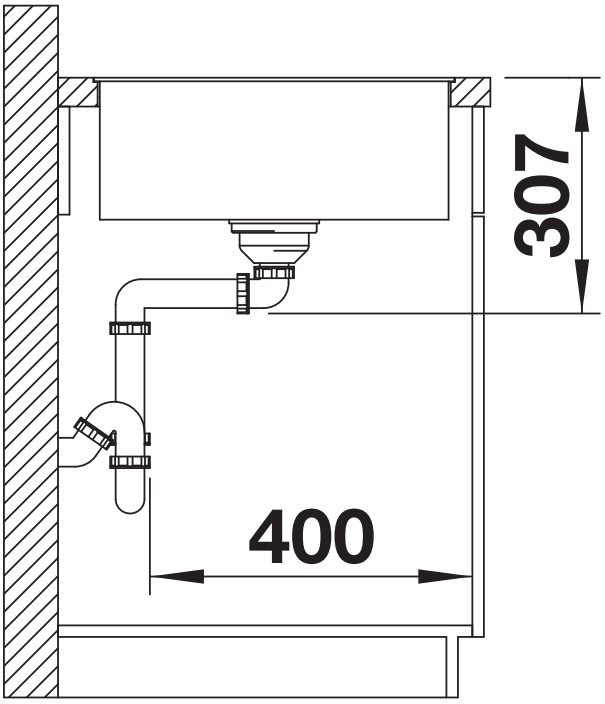

Side view