Product information sheet AXIA III XL 6 S-F

Item no. 523520

Benefits



- Smooth, ergonomic work flow along two axis
- Design that is notable for clear lines and the ultra-narrow rim
- Tight radii for maximum utilisation of the surface and volume
- Movable chopping board for working directly into cooking dishes
- Spacious bowl size and beautifully integrated, practical drainer groove
- High-quality features with drain remote control, covered C-overflow and InFino drain system – elegantly integrated and easy-care
- Flushmount version. Can be installed reversibly

Colours



Available colours:

anthracite
rock grey
coffee
white
black
soft white
volcano grey

SILGRANIT anthracite

Scope of supply

- movable ash compound bridging chopping board
- waste kit with space-saving pipe
- 3 ½'' InFino basket strainer with drain remote control (rotary switch)

Details

Min cabinet size	600 mm

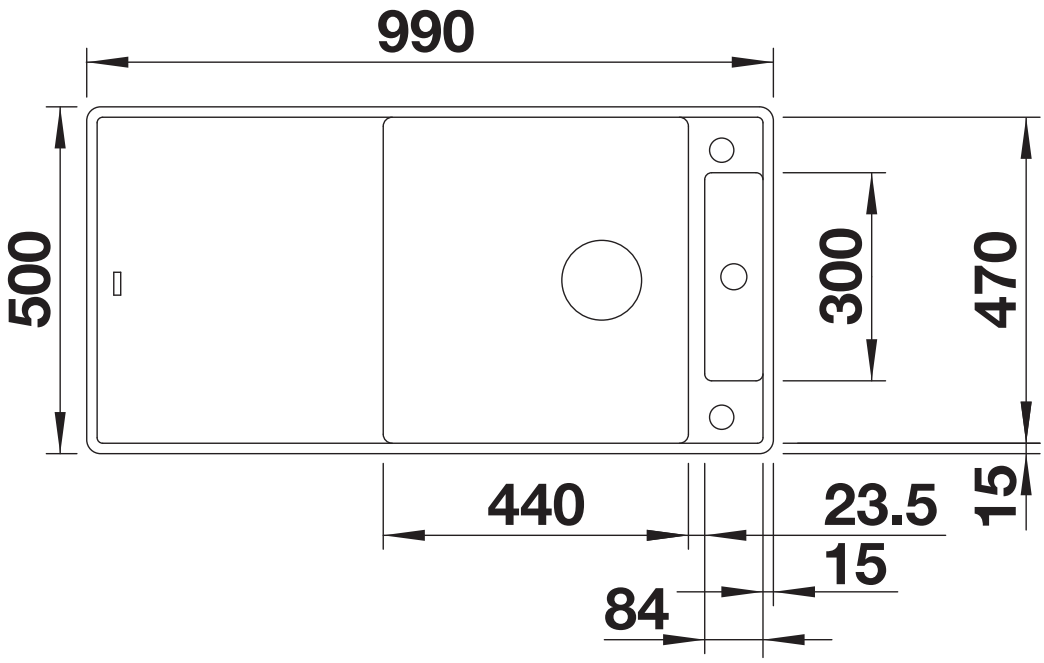

Top view

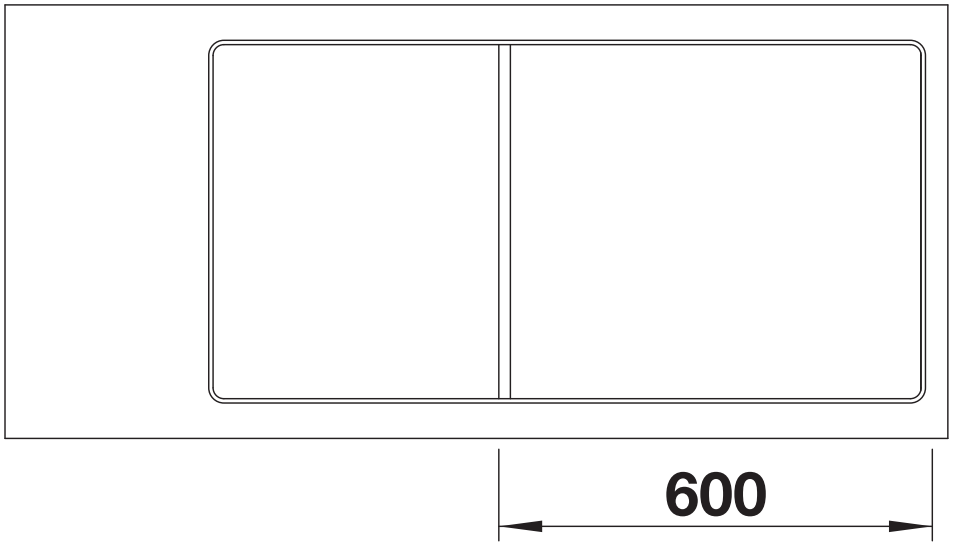

Cut-out

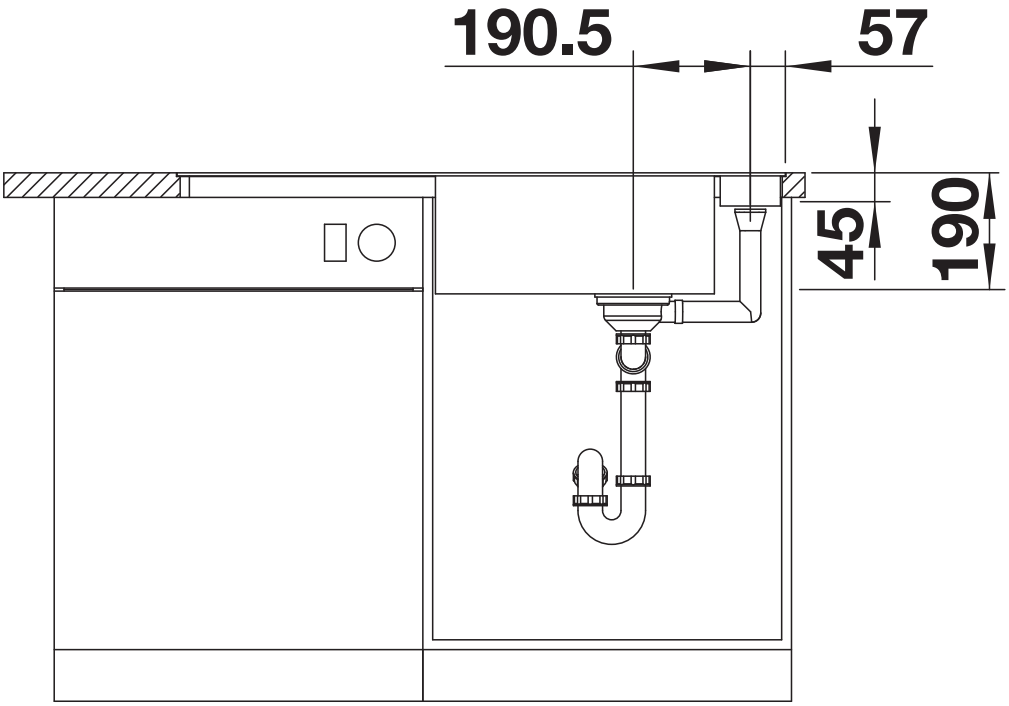

Front view

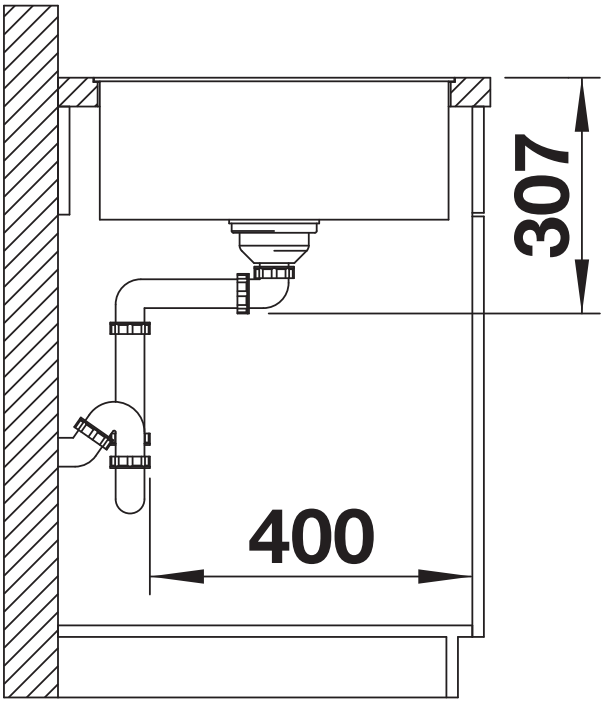

Side view