Product information sheet AXIA III XL 6 S

Item no. 523519

Benefits



- Smooth, ergonomic work flow along two axis
- Design that is notable for clear lines and the ultra-narrow, low-profile rim
- Tight radii for maximum utilisation of the surface and volume
- Movable cutting board for working directly into cooking dishes
- Spacious bowl size and beautifully integrated, practical drainer groove
- High-quality features with drain remote control, covered C-overflow and InFino drain system – elegantly integrated and easy-care
- Can be installed reversibly

Colours



Available colours:

black
anthracite
rock grey
volcano grey
white
soft white
tartufo
coffee

SILGRANIT coffee

Planning information

- Cut out: 980 x 490 x R15
- Bowl depth: 190mm
- Universal handing

Scope of supply

- movable safety glass cutting board
- waste kit with space-saving pipe
- 3 ½'' InFino basket strainer with drain remote control (rotary switch)

Details

Min cabinet size	600 mm

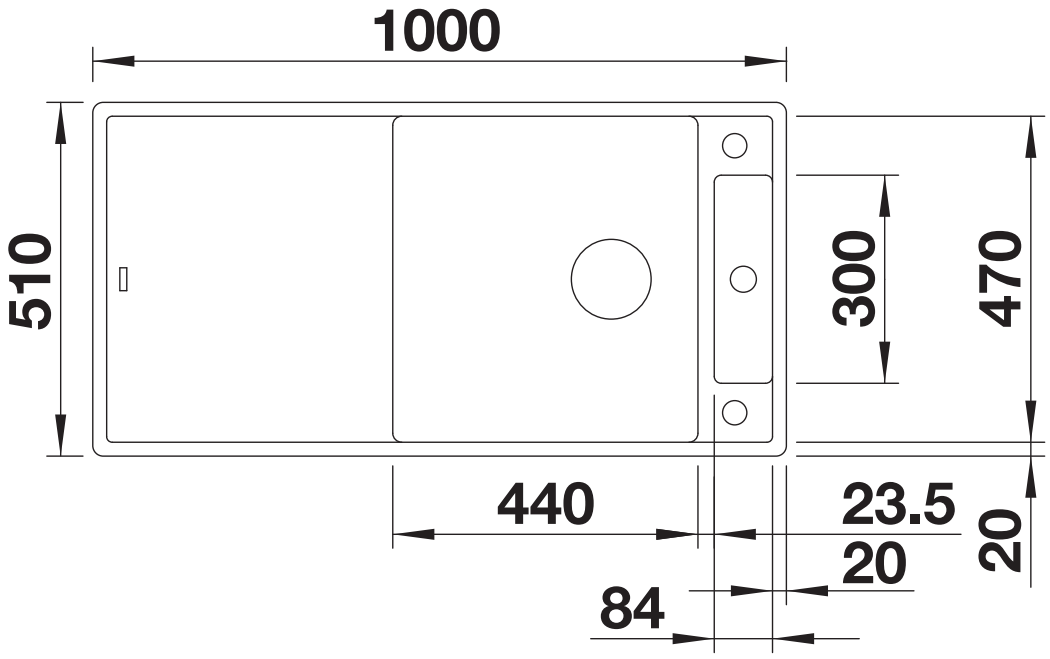

Top view

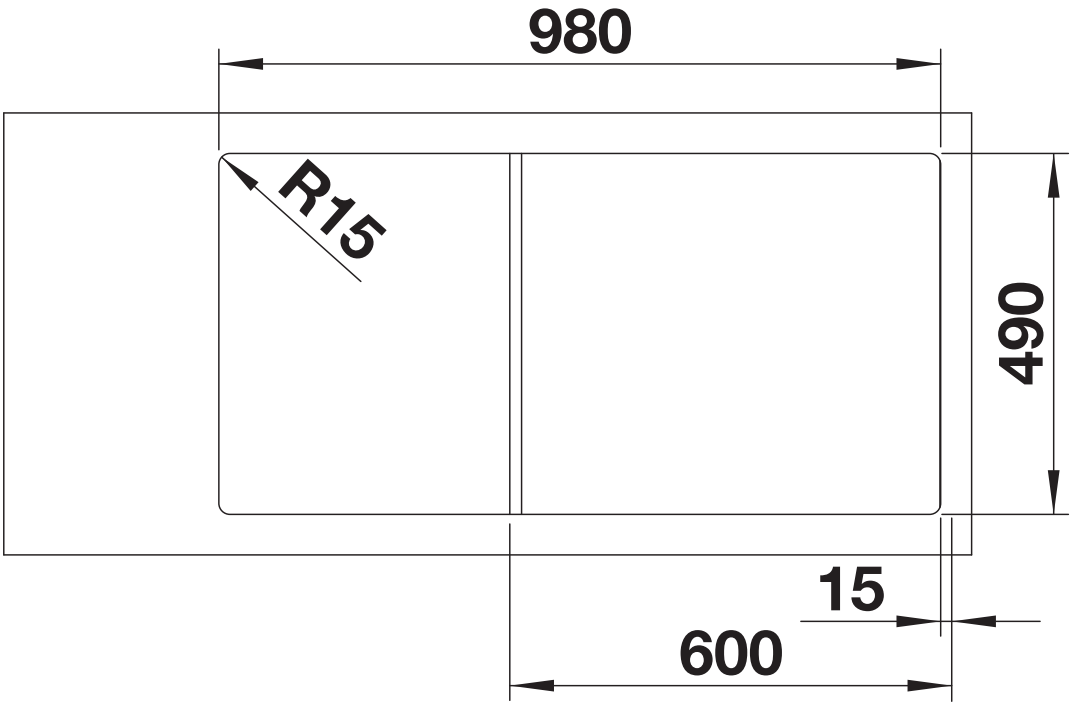

Cut-out

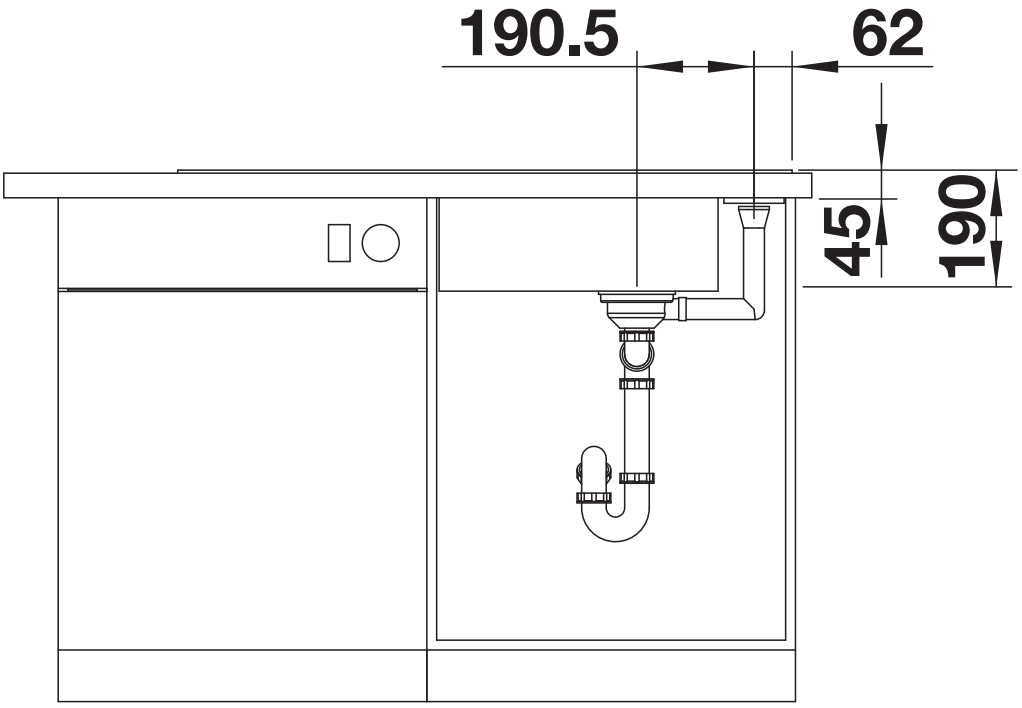

Front view

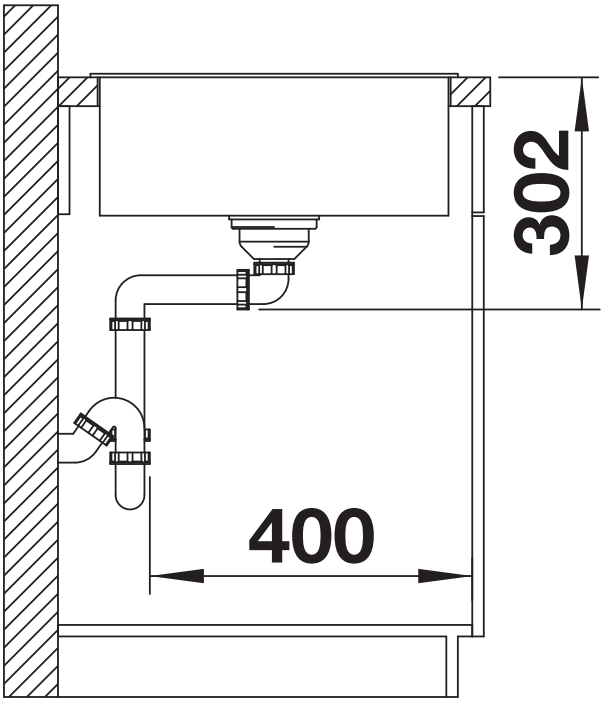

Side view