Product information sheet AXIA III 6 S-F

Item no. 523489

Benefits



- Smooth, ergonomic work flow along two axis
- Design that is notable for clear lines and the ultra-narrow rim
- Tight radii for maximum utilisation of the surface and volume
- Movable cutting board for working directly into cooking dishes
- Multifunctional colander can also be freely positioned in the main bowlfor easy food preparation
- High-quality features with drain remote control, covered C-overflow and InFino drain system – elegantly integrated and easy-care

Colours



Available colours:

anthracite
coffee
rock grey
white
black
soft white
volcano grey

SILGRANIT anthracite

Scope of supply

- movable safety glass cutting board
- multifunctional stainless steel colander
- waste kit with space-saving pipe
- 2 x 3 ½'' InFino basket strainer with drain remote control (rotary switch) for the main bowl

Details

Min cabinet size 600 mm

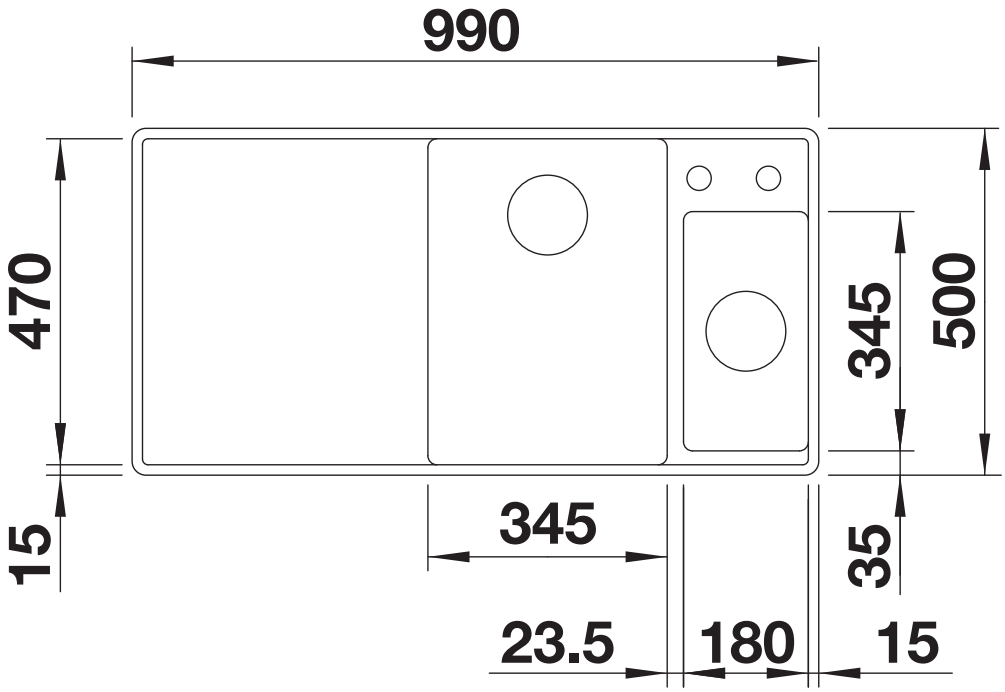

Top view

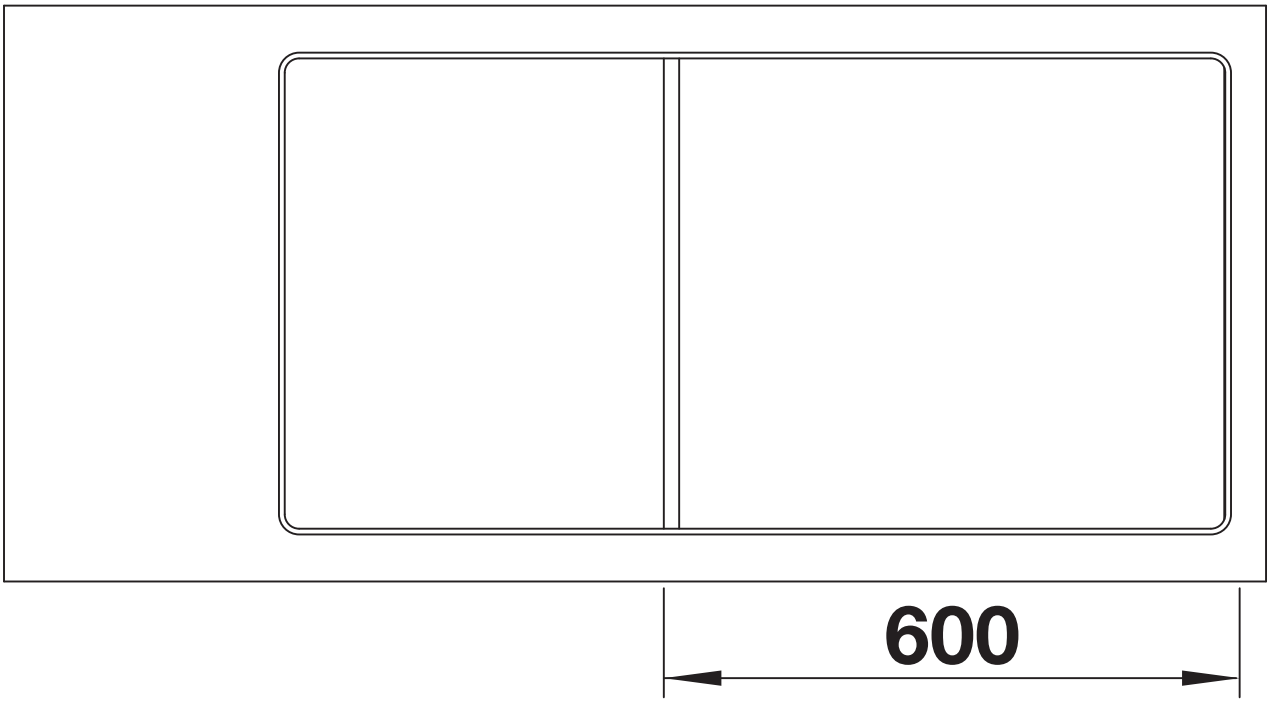

Cut-out

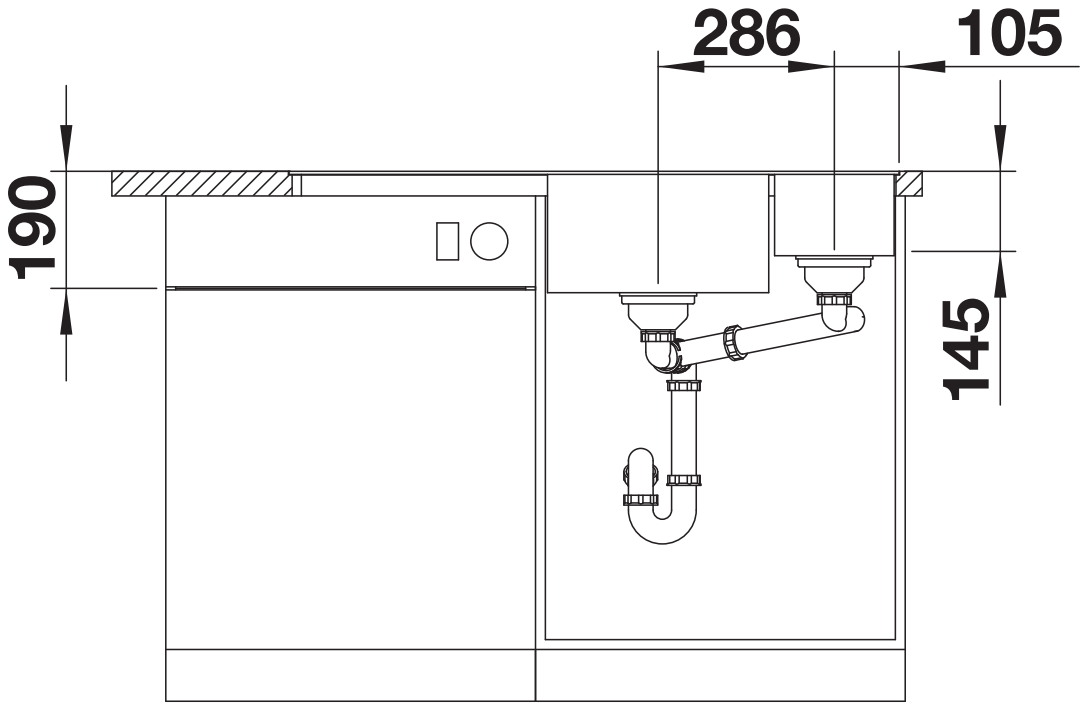

Front view

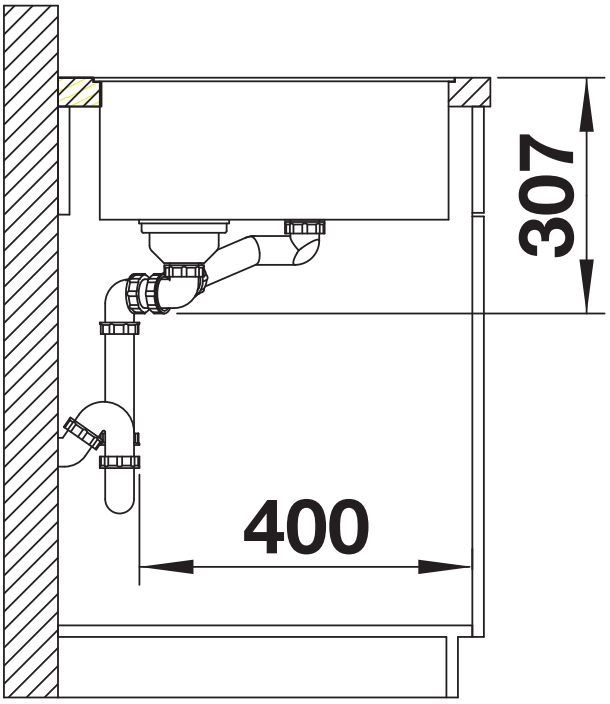

Side view