# Product information sheet AXIA III 5 S-F

Item no. 525846

## Benefits



- Smooth, ergonomic work flow along two axis
- Design that is notable for clear lines and the ultra-narrow rim
- Tight radii for maximum utilisation of the surface and volume
- Movable cutting board for working directly into cooking dishes
- High-quality features with drain remote control, covered C-overflow and InFino drain system – elegantly integrated and extremely easy-care
- Flushmount version

## Colours



Available colours:

white
coffee
rock grey
black
volcano grey
soft white
anthracite

SILGRANIT black

## Scope of supply

- movable safety glass cutting board
- waste kit with space-saving pipe
- 3 ½'' InFino basket strainer with drain remote control (rotary switch)

## Details

Min cabinet size 500 mm

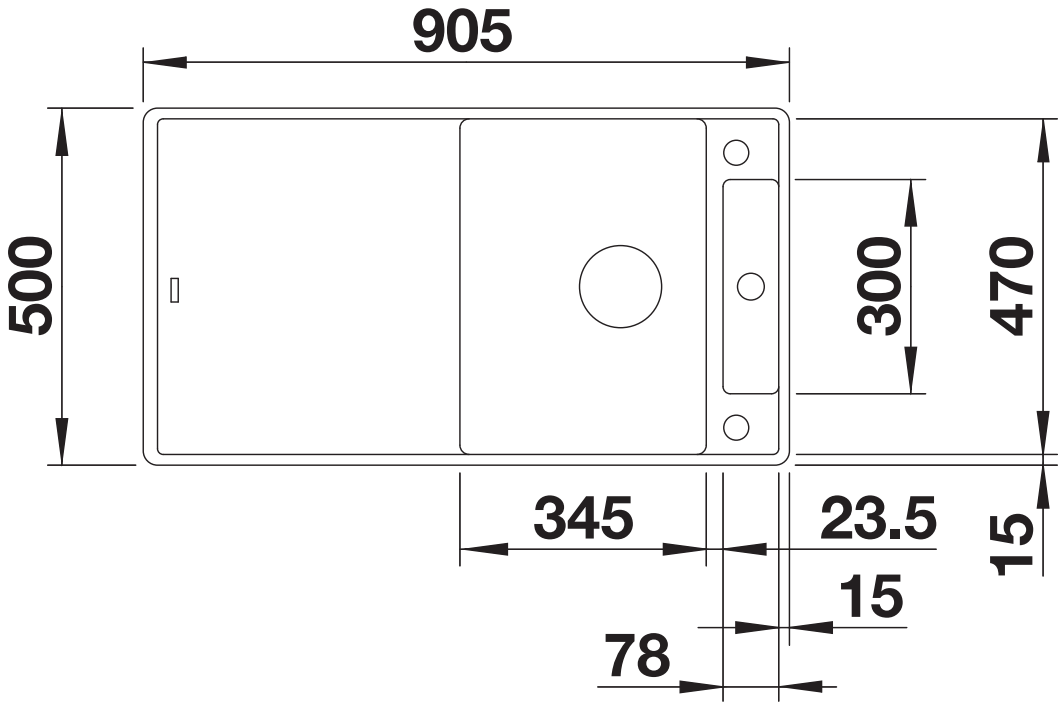


Top view

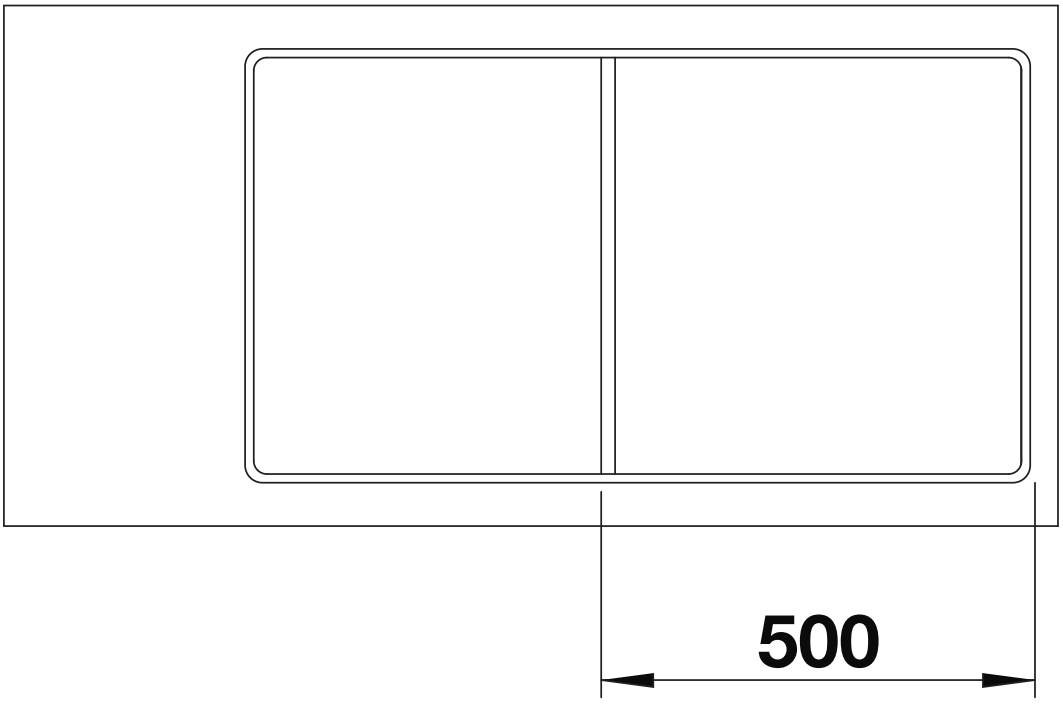


Cut-out

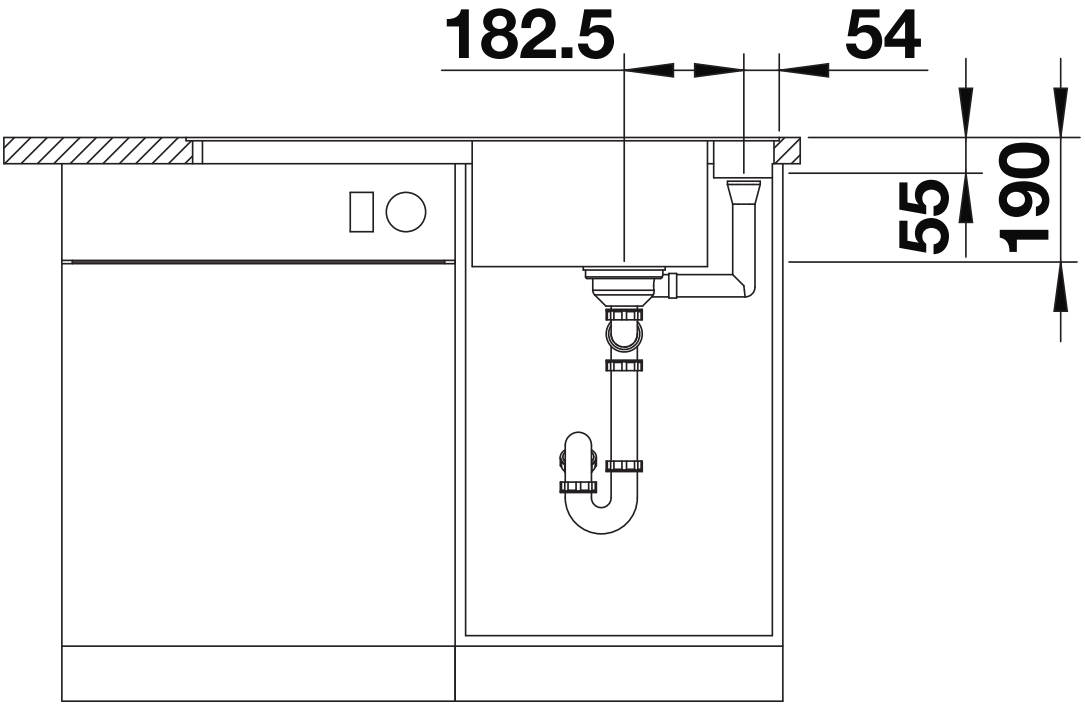


Front view

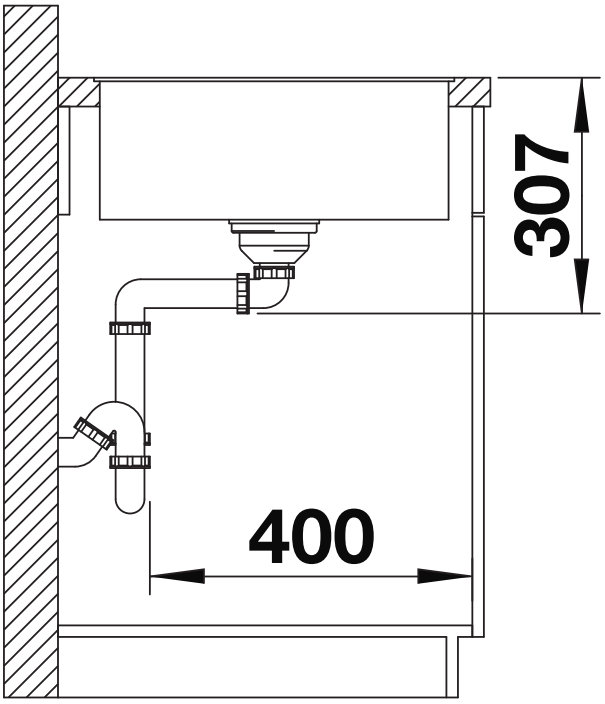


Side view