Product information sheet AXIA III 5 S

Item no. 523216

Benefits



- Smooth, ergonomic work flow along two axis
- Design that is notable for clear lines and the ultra-narrow,low profile rim
- Tight radii for maximum utilisation of the surface and volume
- Multifunctional colander can also be freely positioned in the main bowl for easy food preparation
- Movable cutting board for working directly into cooking dishes
- High-quality features with drain remote control, covered C-overflow and InFino drain system – elegantly integrated and easy-care

Colours



Available colours:

black
anthracite
rock grey
white
tartufo
coffee
soft white
volcano grey

SILGRANIT rock grey

Scope of supply

- movable safety glass cutting board
- waste kit with space-saving pipe
- 3 ½'' InFino basket strainer with drain remote control (rotary swith)

Details

Min cabinet size 500 mm

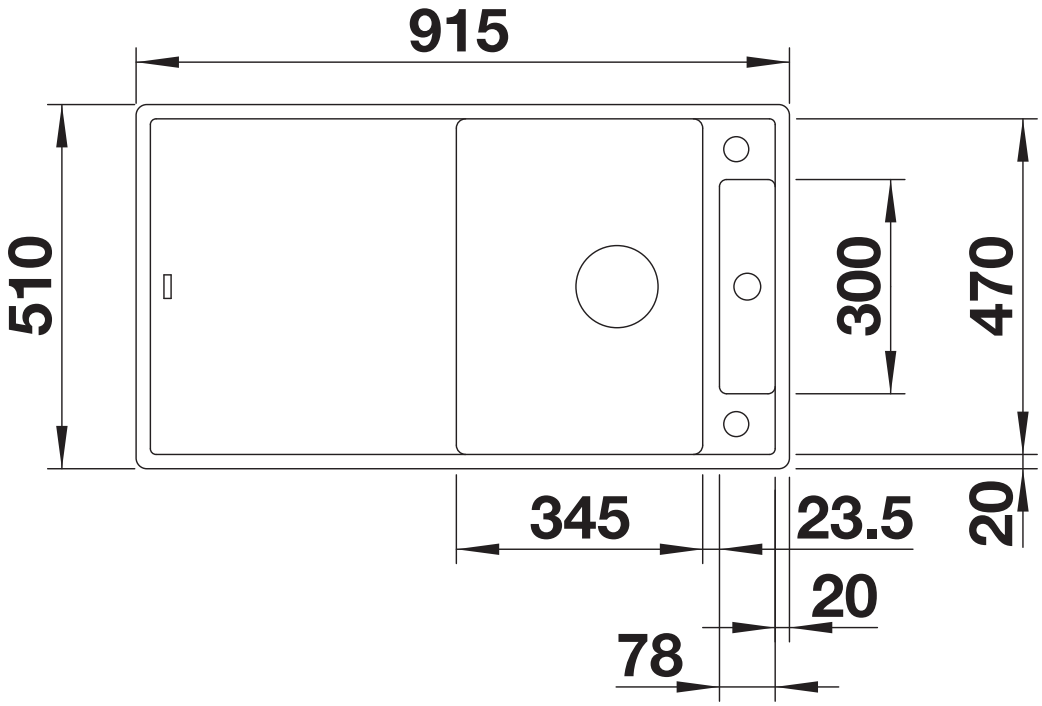

Top view

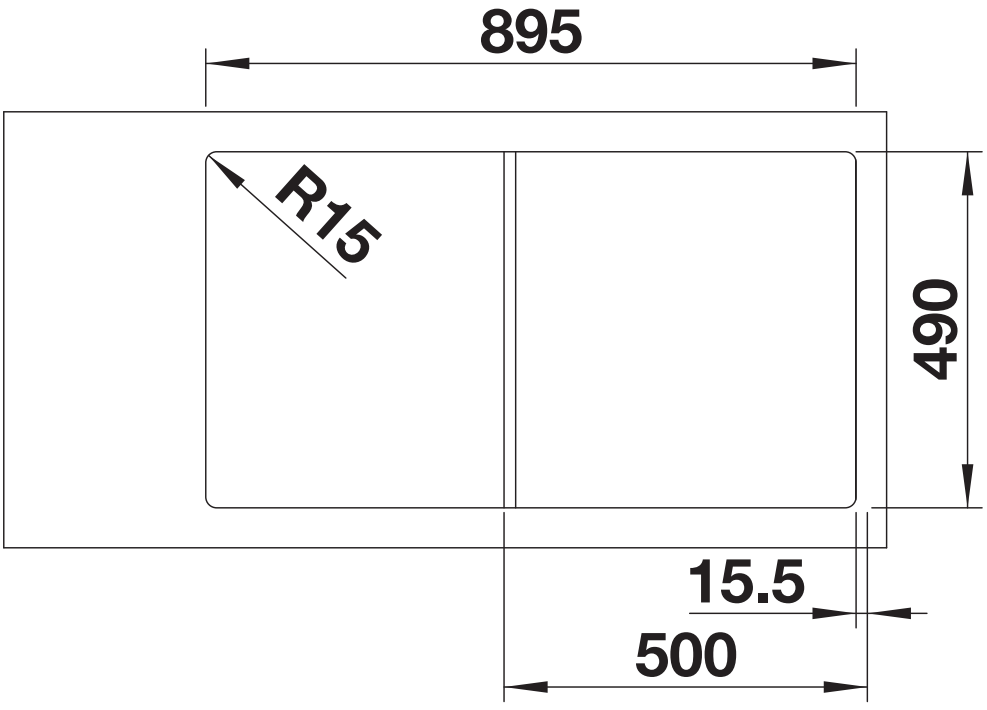

Cut-out

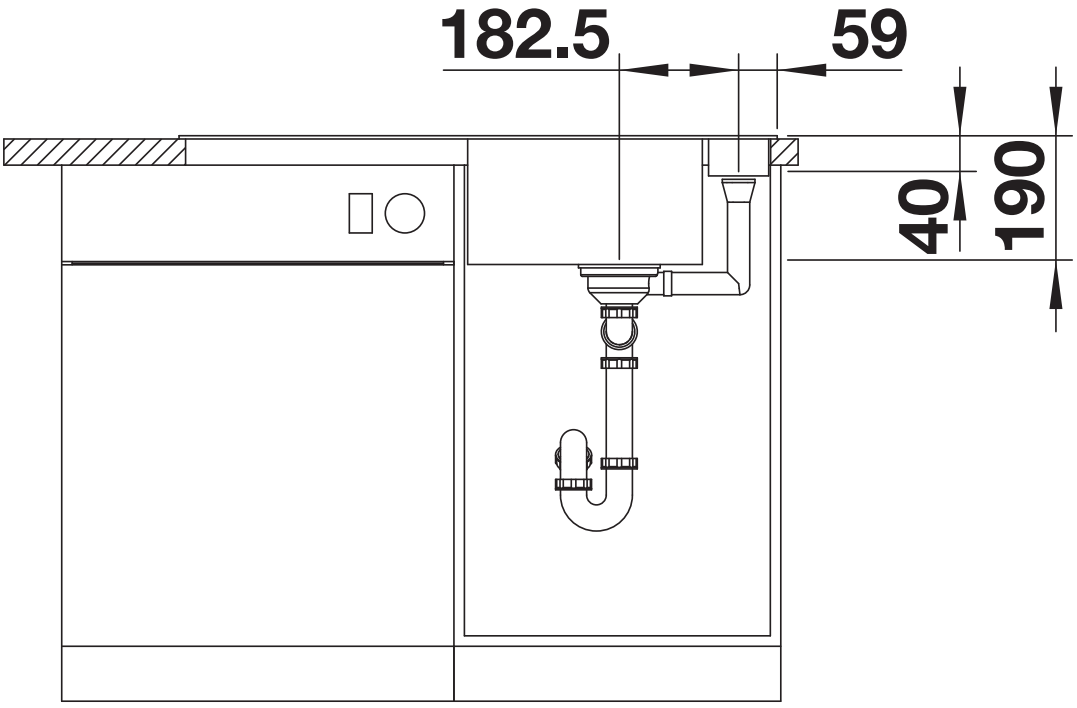

Front view

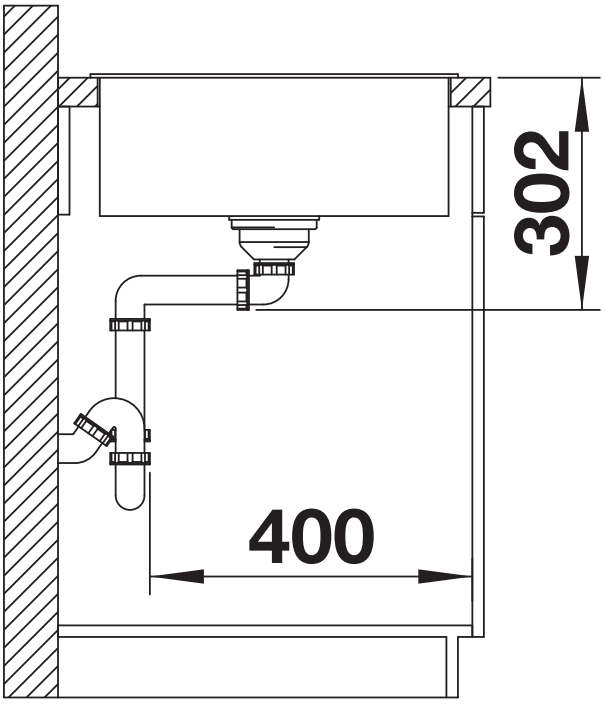

Side view