Product information sheet AXIA III 45 S-F

Item no. 527220

Benefits



- Smooth, ergonomic work flow along two axis
- Design that is notable for clear lines and the ultra-narrow rim
- Tight radii for maximum utilisation of the surface and volume
- Movable glass cutting board for working directly into cooking dishes
- High-quality features with drain remote control, covered C-overflow and InFino drain system – elegantly integrated and easy-care
- Flushmount version

Colours



Available colours:

coffee
rock grey
white
black
soft white
volcano grey
anthracite

SILGRANIT volcano grey

Scope of supply

- movable safety glass cutting board
- waste kit with space-saving pipe
- 3 ½'' InFino basket strainer with drain remote control (rotary switch)

Details

Min cabinet size 450 mm

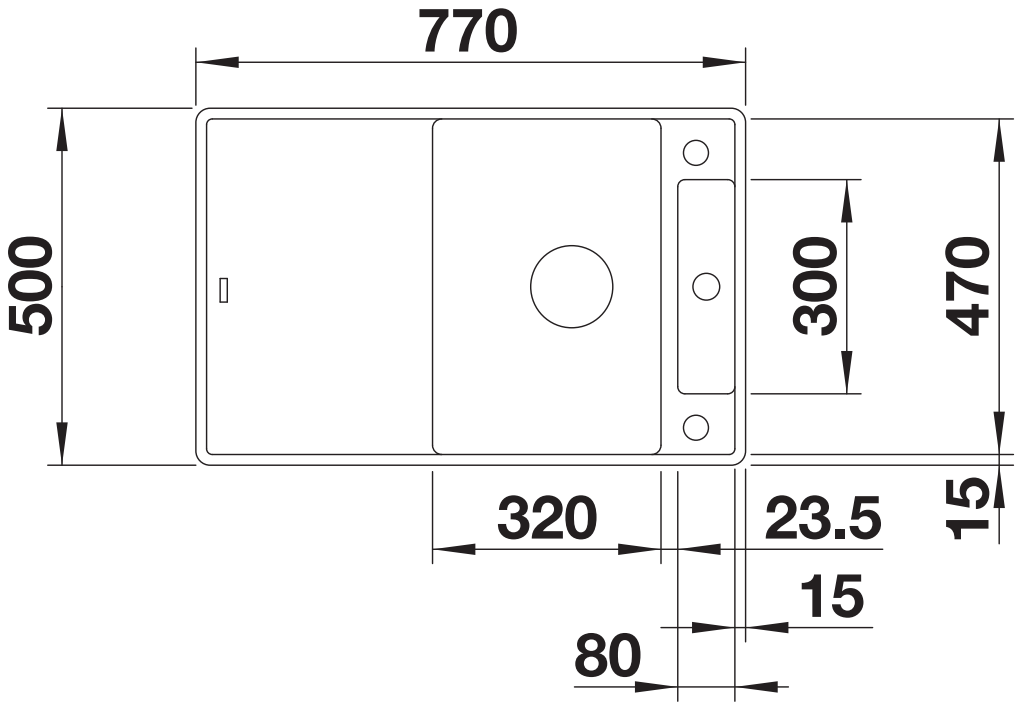

Top view

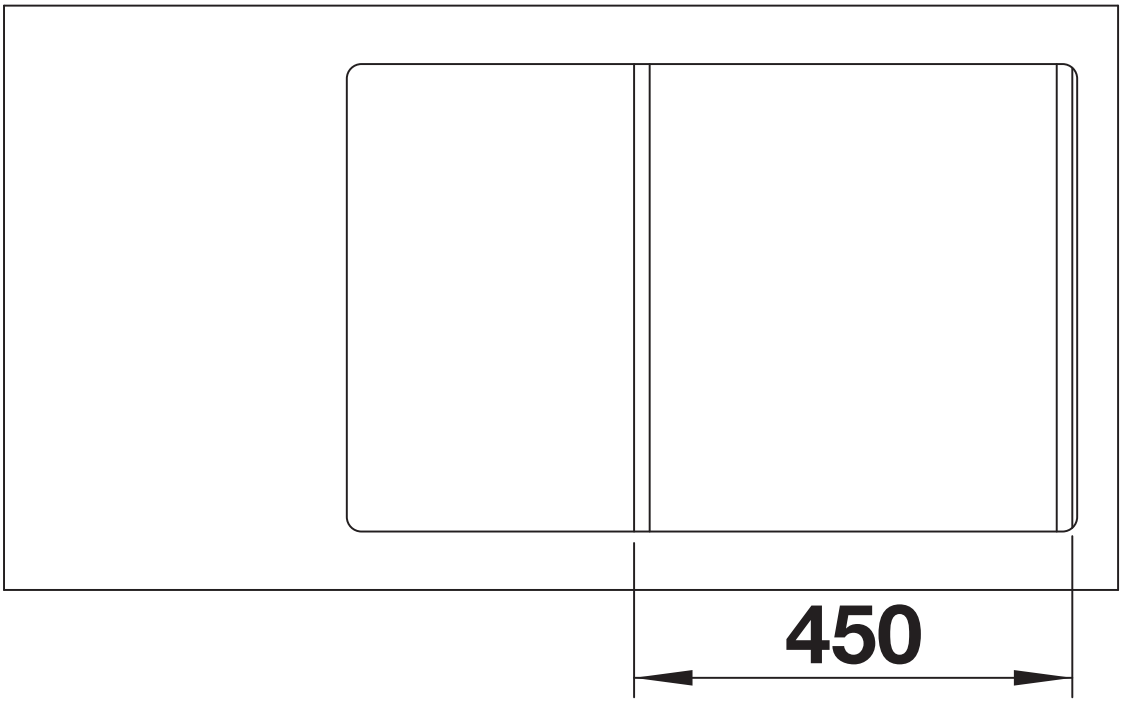

Cut-out

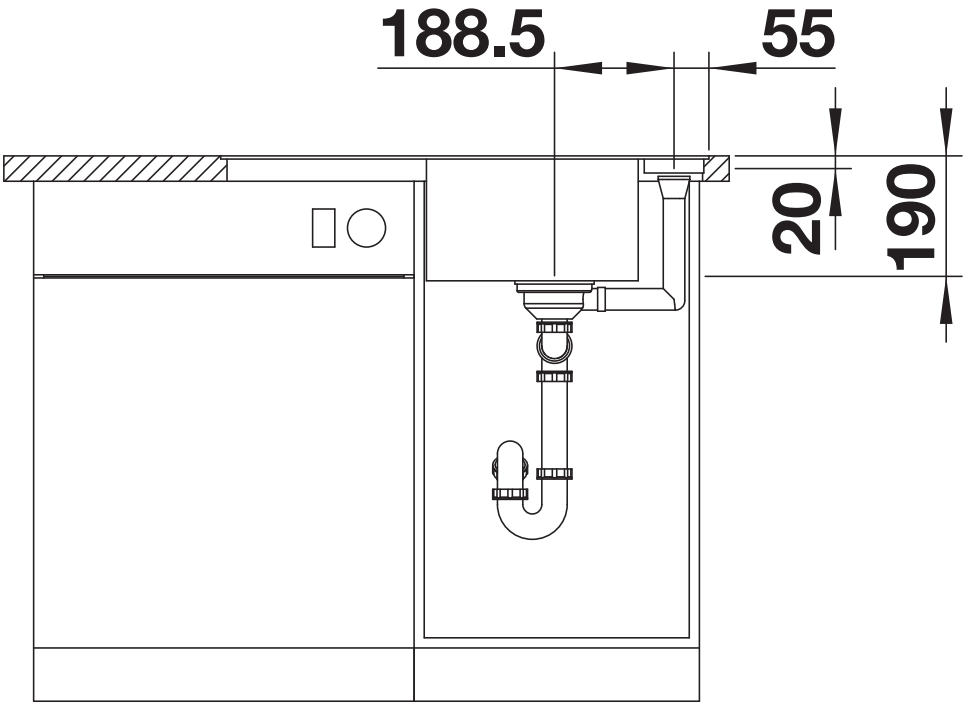

Front view

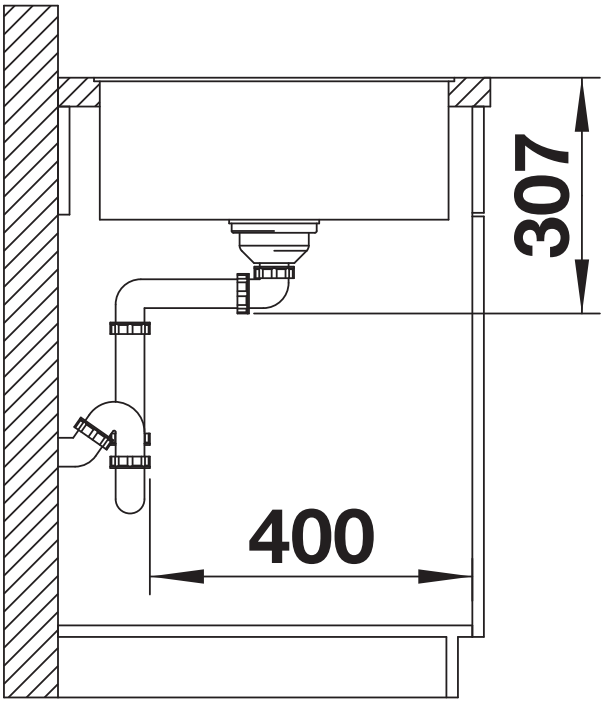

Side view