Product information sheet AXIA III 45 S

Item no. 523173

Benefits



- Smooth, ergonomic work flow along two axis
- Design that is notable for clear lines and the ultra-narrow, low profile rim
- Tight radii for maximum utilisation of the surface and volume
- Movable ash compound bridging chopping board or glass cutting board for working directly into cooking dishes
- High-quality features with drain remote control, covered C-overflow and InFino drain system – elegantly integrated and easy-care

Colours



Available colours:

anthracite
rock grey
white
tartufo
coffee
black
soft white
volcano grey

SILGRANIT anthracite

Scope of supply

- movable ash compound bridging chopping board
- waste kit with space-saving pipe
- 3 ½'' InFino basket strainer with drain remote control (rotary switch)

Details

Min cabinet size 450 mm

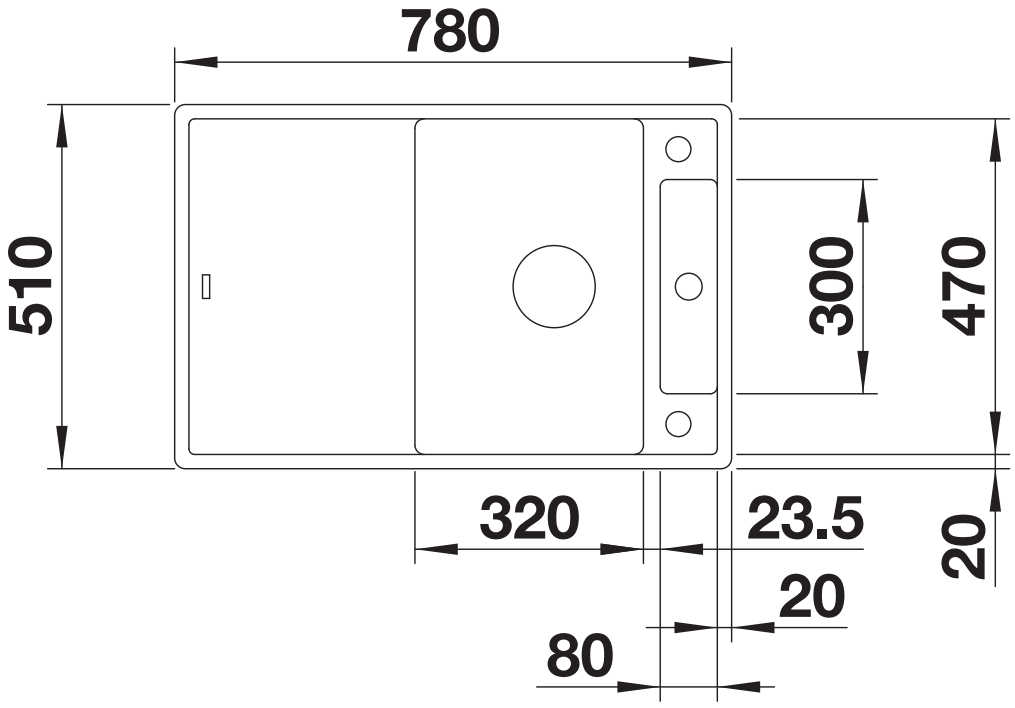

Top view

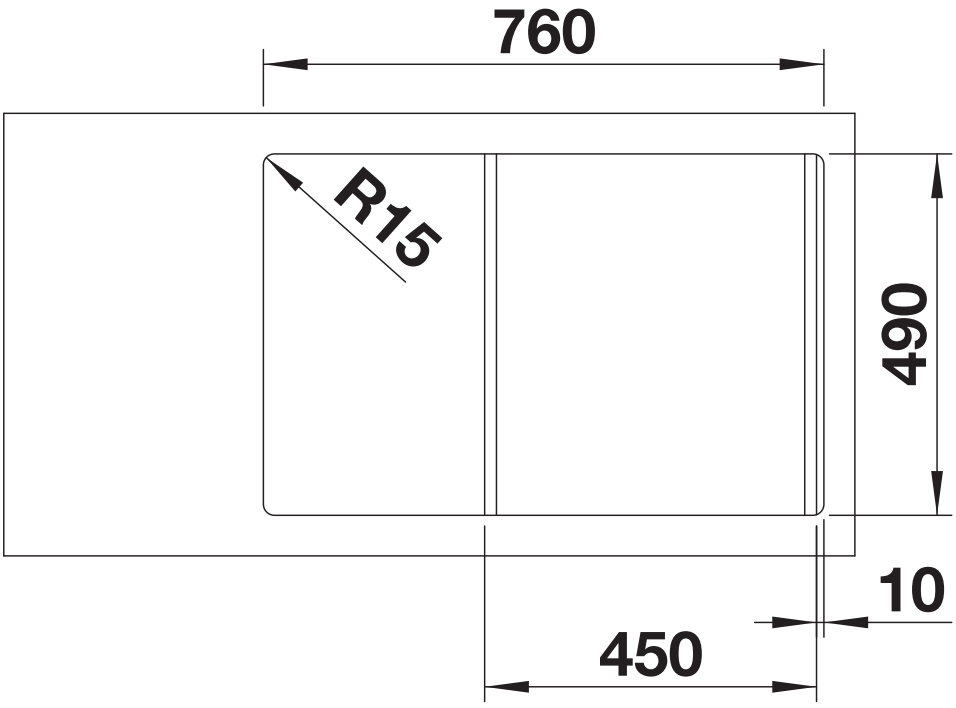

Cut-out

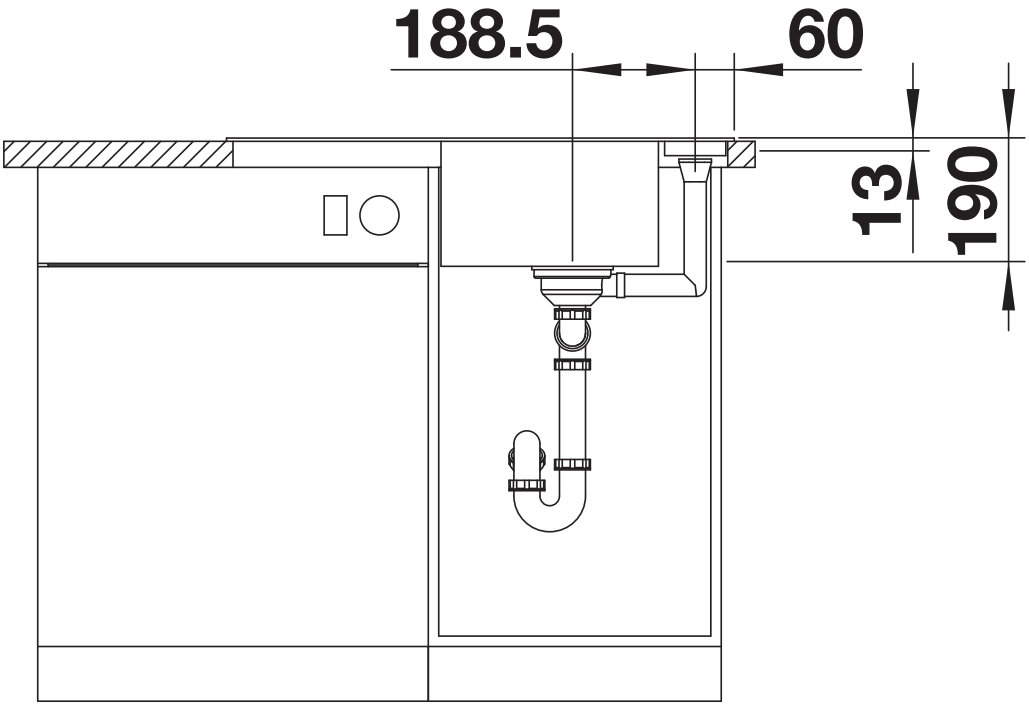

Front view

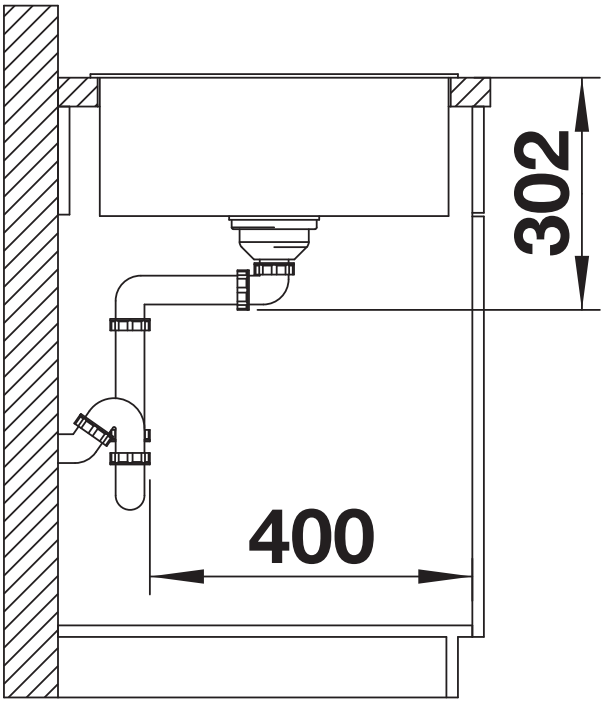

Side view