Product information sheet ANDANO 500/180-U

Item no. 522991

Benefits



- Balanced composition of optical and functional elements
- The harmonious interplay between the radii and surface design creates a modern appeal
- High quality features consisting of a covered C-overflow and InFino drain system – gracefully integrated and easy-care
- Large bowl capacity and fully utilisable base
- The Multi Match Cutting Board adds and additional level your workspace by resting securely over the sink, creating a stable surface for effortless cutting and chopping while keeping the worktop clear
- Optional premium accessories are available

Planning information

- Cut out: 705 x 400 x R22
- Please state hand of bowl

Scope of supply

- waste kit with space-saving pipe
- 2 x 3 ½'' InFino basket strainer
- fixing kit

Details

Min cabinet size 800 mm

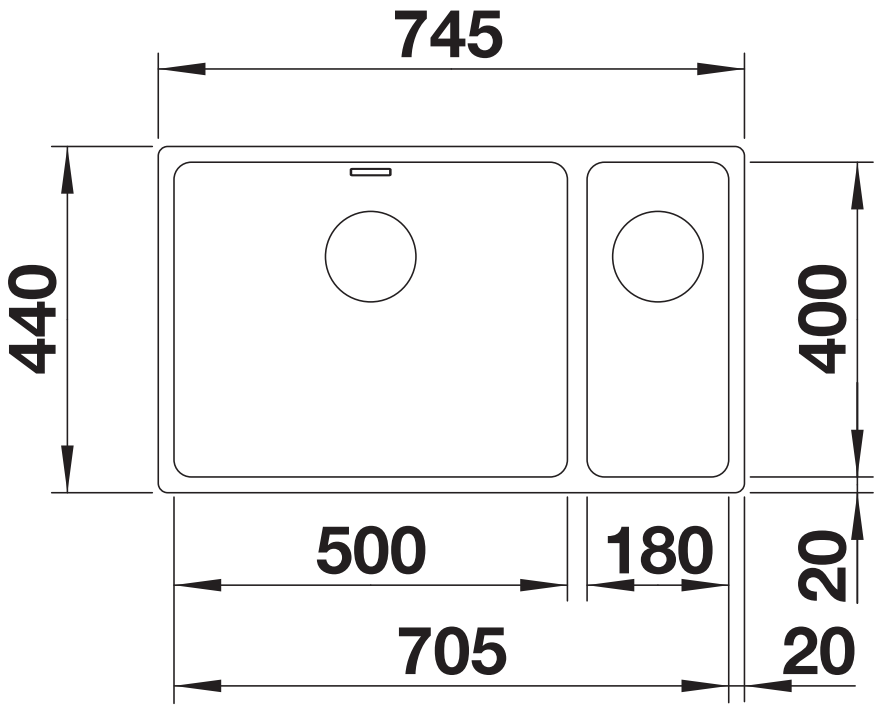

Top view

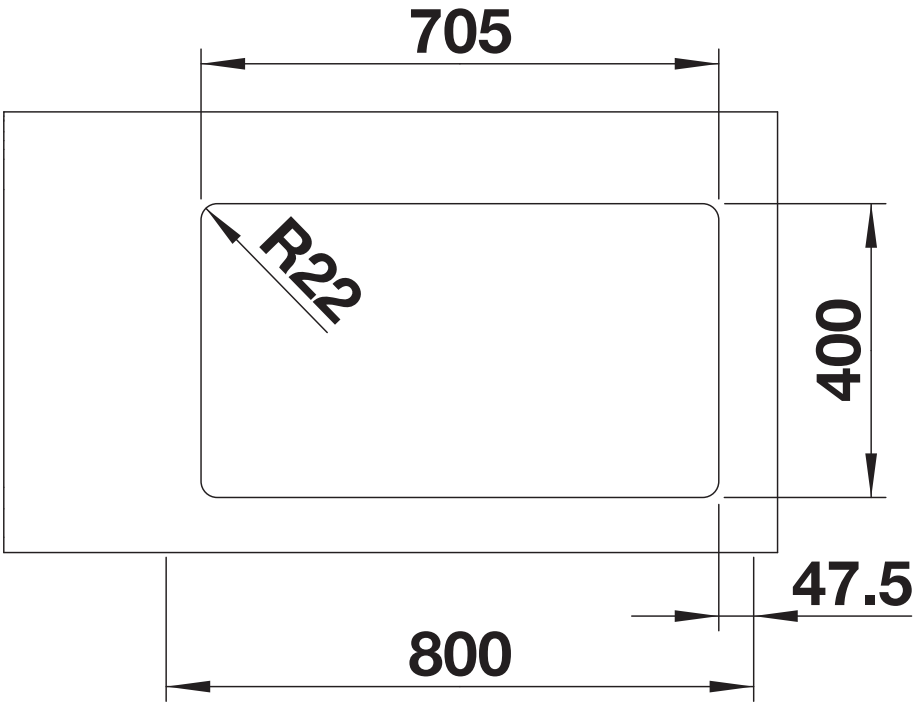

Cut-out

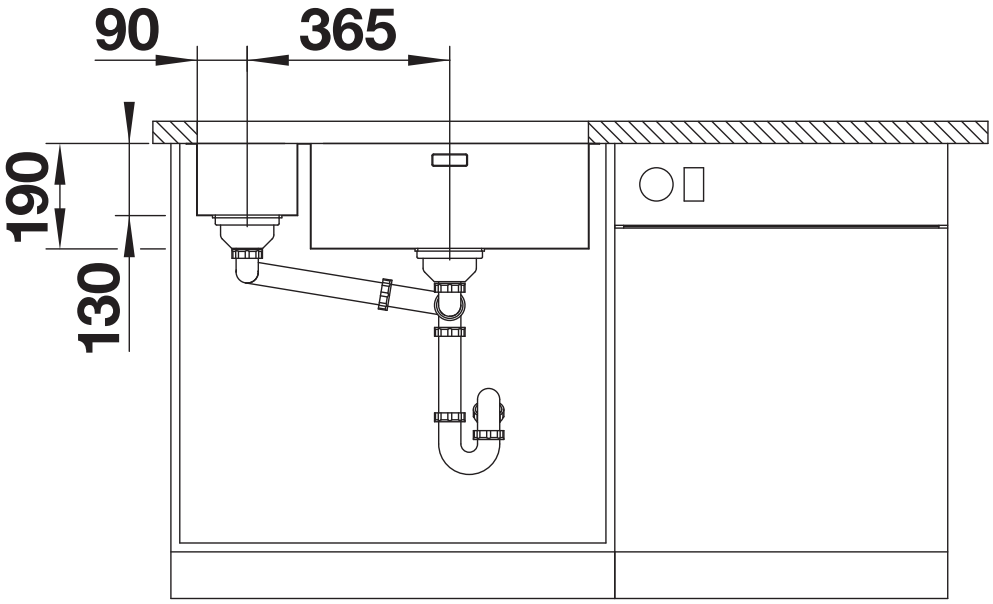

Front view

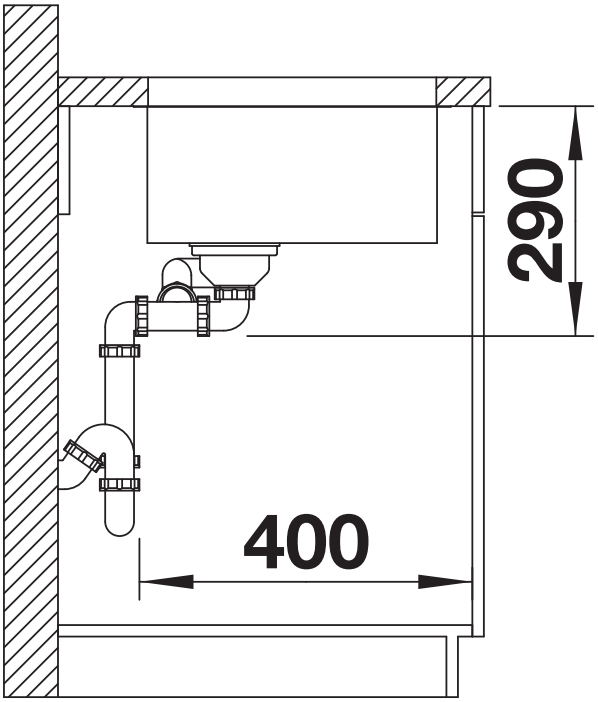

Side view