Product information sheet ANDANO 450-U

Item no. 522963

Benefits



- Balanced composition of optical and functional elements
- The harmonious interplay between the radii and surface design creates a modern appeal
- High quality features consisting of a covered C-overflow and InFino drain system – gracefully integrated and easy-care
- Large bowl capacity and fully utilisable base
- The Multi Match Cutting Board adds and additional level your workspace by resting securely over the sink, creating a stable surface for effortless cutting and chopping while keeping the worktop clear
- Optional premium accessories are available

Planning information

- Note: Please order drain connections for combinations of two individual bowls separately.

Scope of supply

- waste kit with space-saving pipe
- 3 ½'' InFino basket strainer
- fixing kit

Details

Min cabinet size 500 mm

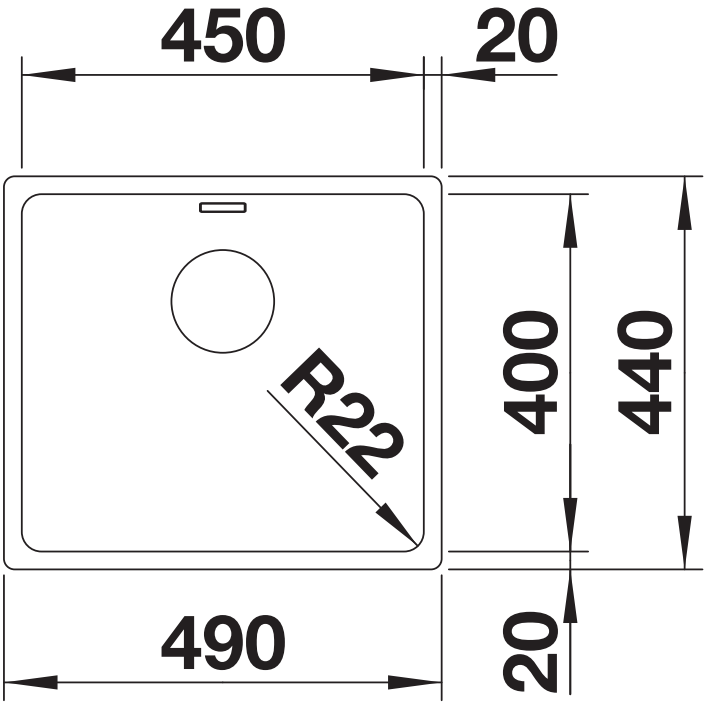

Top view

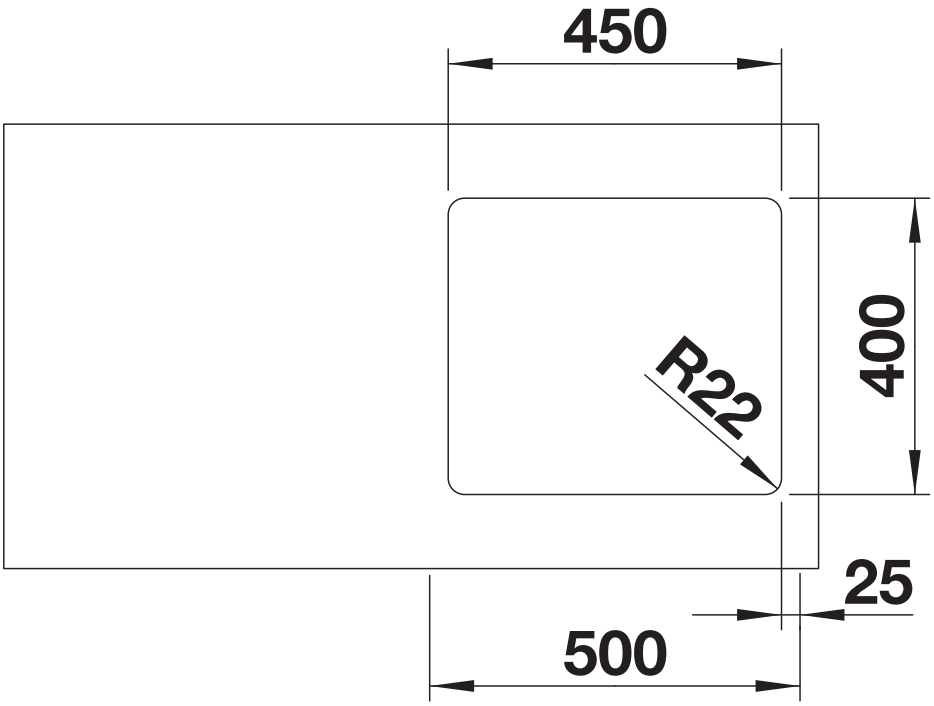

Cut-out

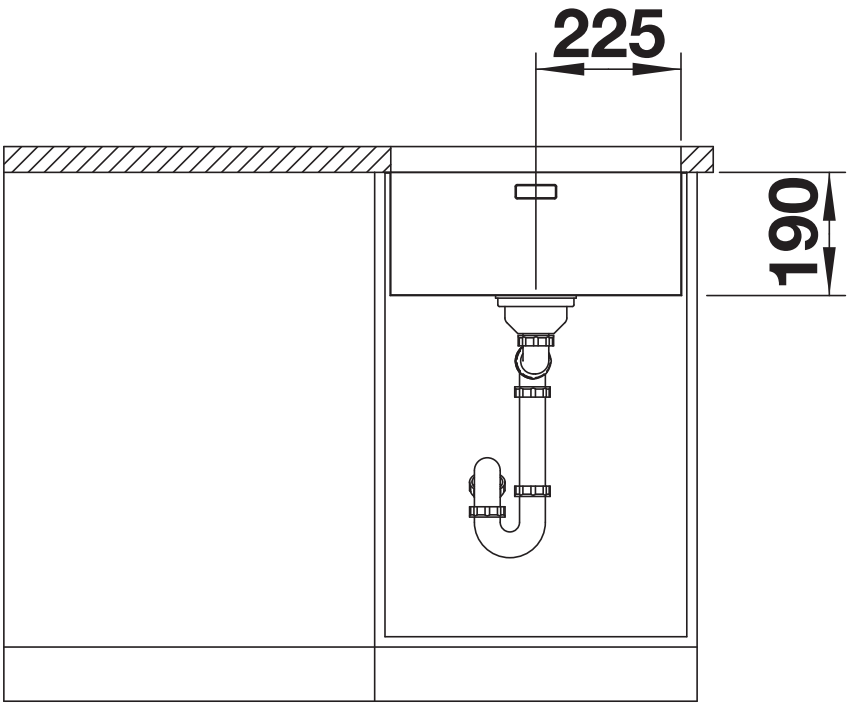

Front view

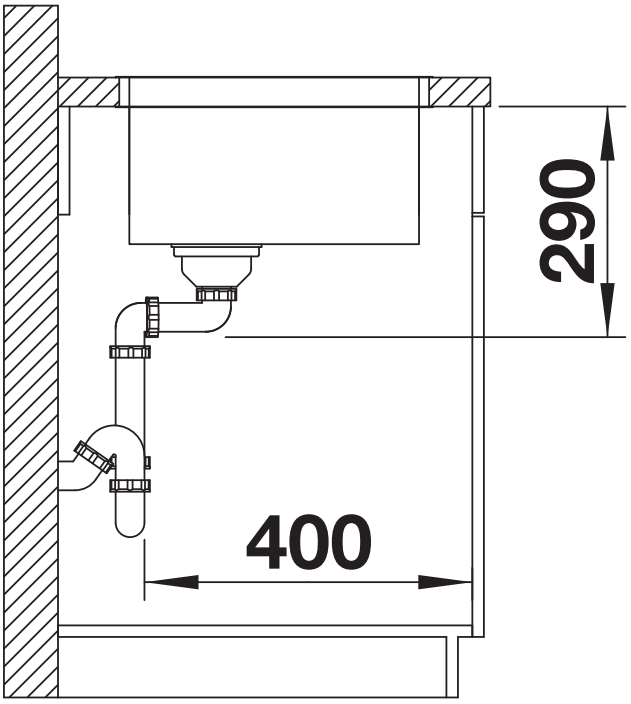

Side view