Product information sheet ANDANO 340/180-IF

Item no. 522973

Benefits



- Unique composition of optical and functional elements
- The harmonious interplay between the radii and surface design creates a modern appeal
- High quality features consisting of a covered C-overflow and InFino drain system – gracefully integrated and easy-care
- Large bowl capacity and fully utilisable base
- Elegant IF flat-rim for flushmount and for installation from above
- The Multi Match Cutting Board adds and additional level your workspace by resting securely over the sink, creating a stable surface for effortless cutting and chopping while keeping the worktop clear
- Optional premium accessories are available

Planning information

- Note: Installing a kitchen mixer tap, drain remote control or soap dispenser in laminate worktops requires a flexible sealing tape.

Scope of supply

- waste kit with space-saving pipe
- 2 x 3 ½'' InFino basket strainer
- fixing kit

Details

Min cabinet size	600 mm

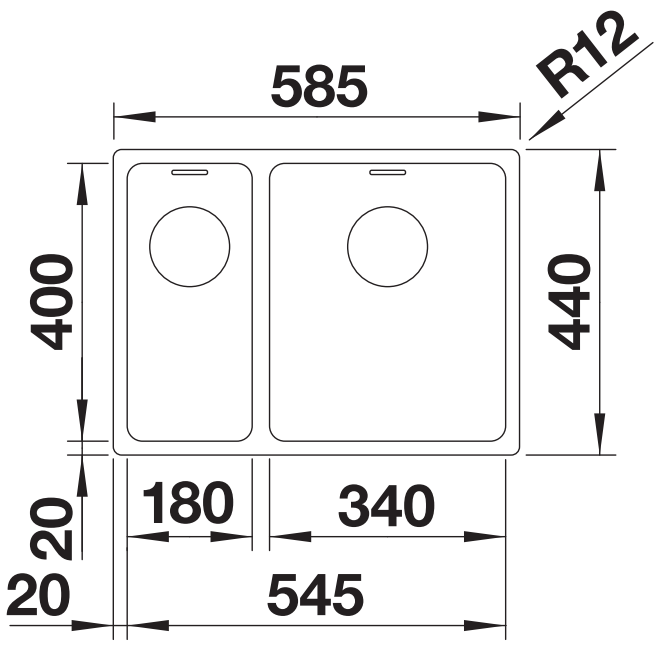

Top view

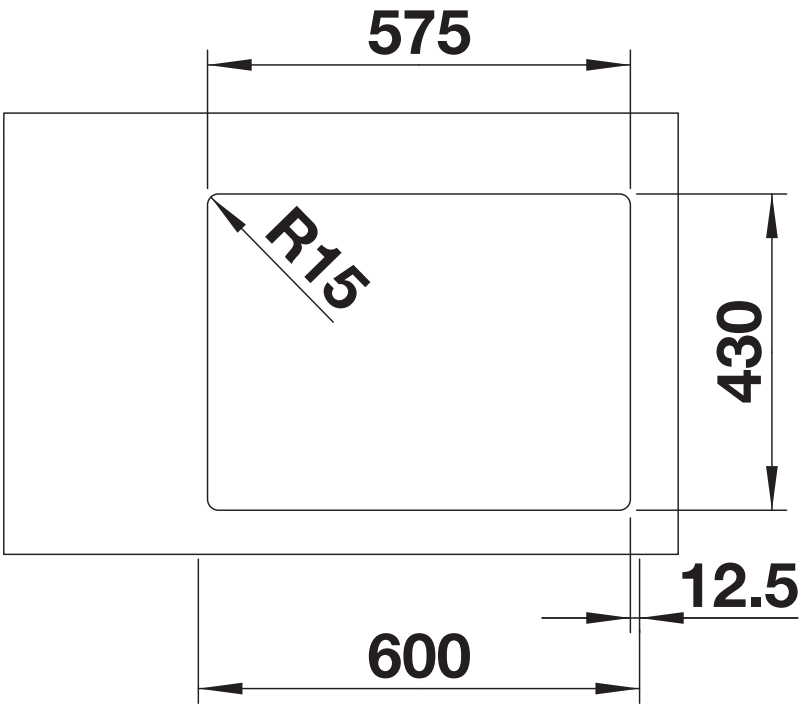

Cut-out

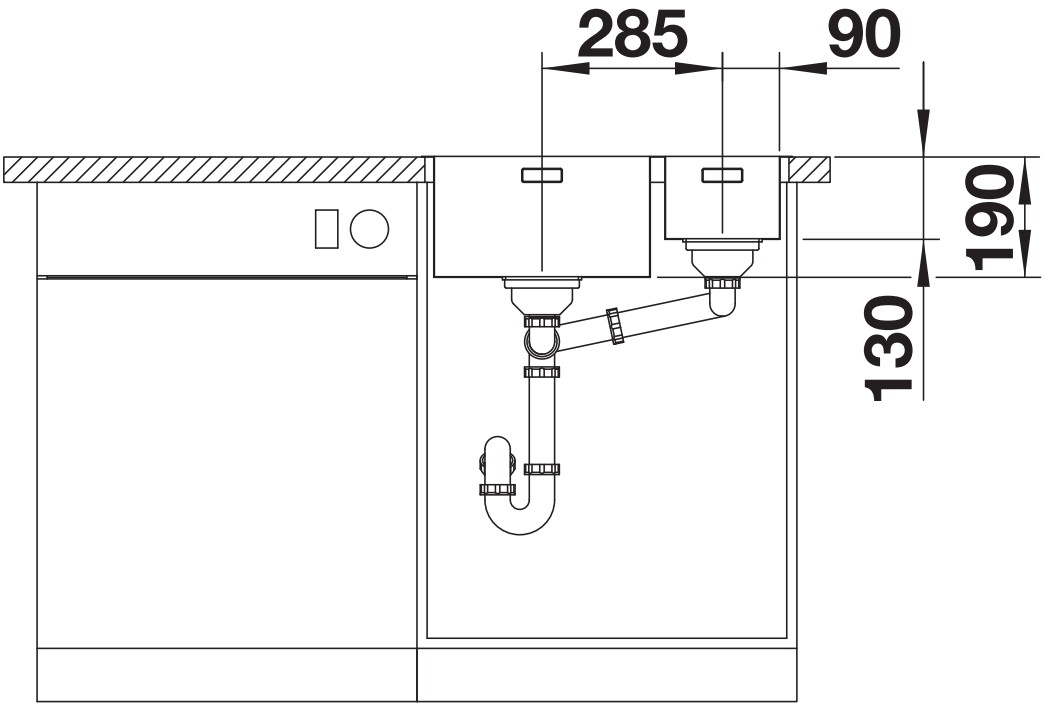

Front view

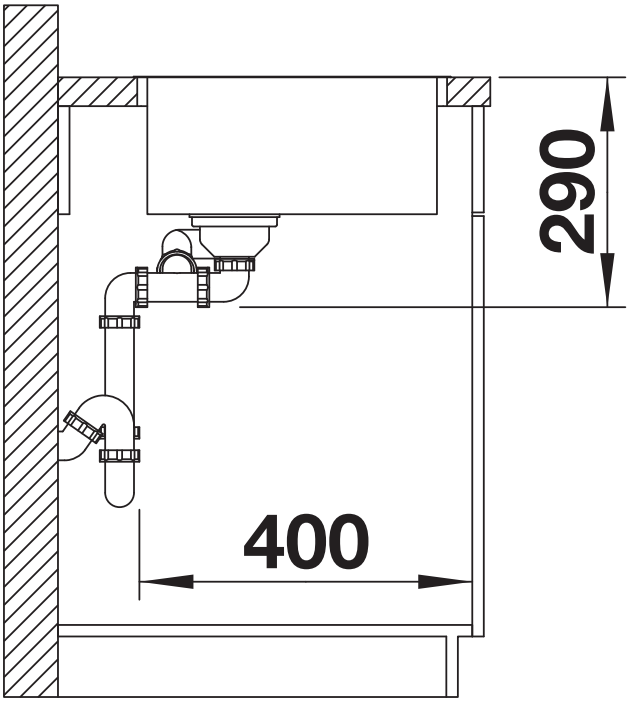

Side view