Product information sheet ADIRA XL 6 S-F

Item no. 527625

Benefits



- Modern sink in beautiful Silgranit colours with extended functionality
- High level of comfort due to XL bowl combined with a practical drain and a plain drain area
- The multifunctional ADIRA grid is included and can be used to create a top-level on the bowl or as a drainer
- The Multi Match Cutting Board adds and additional level your workspace by resting securely over the sink, creating a stable surface for effortless cutting and chopping while keeping the worktop clear.
- For flushmount installation. Can be installed reversibly

Colours



Available colours:

black
rock grey
volcano grey
anthracite
soft white
white
coffee
tartufo

SILGRANIT black

Scope of supply

- foldable ADIRA grid
- waste kit with space-saving pipe
- 3 ½'' InFino basket strainer with drain remote control (rotary switch)

Details

Min cabinet size	600 mm

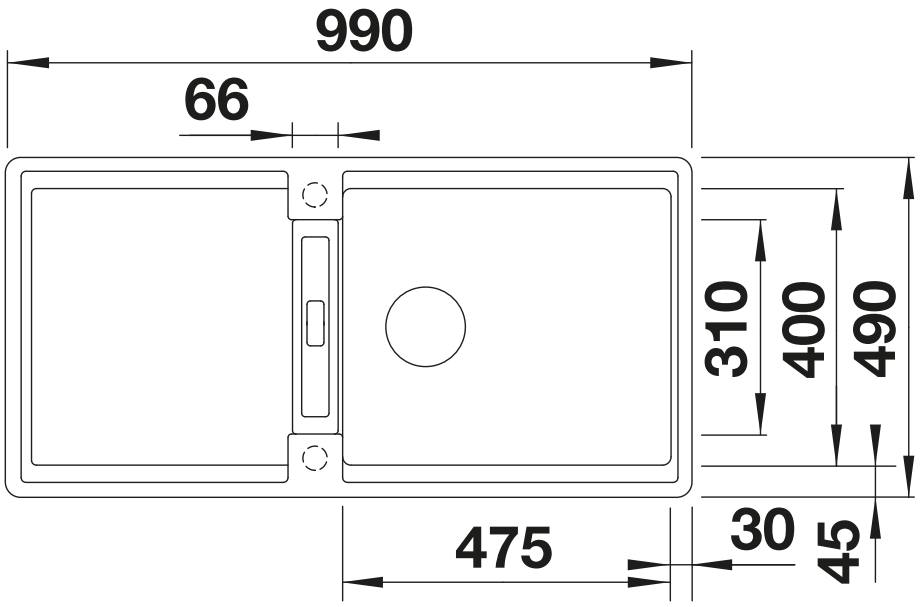

Top view

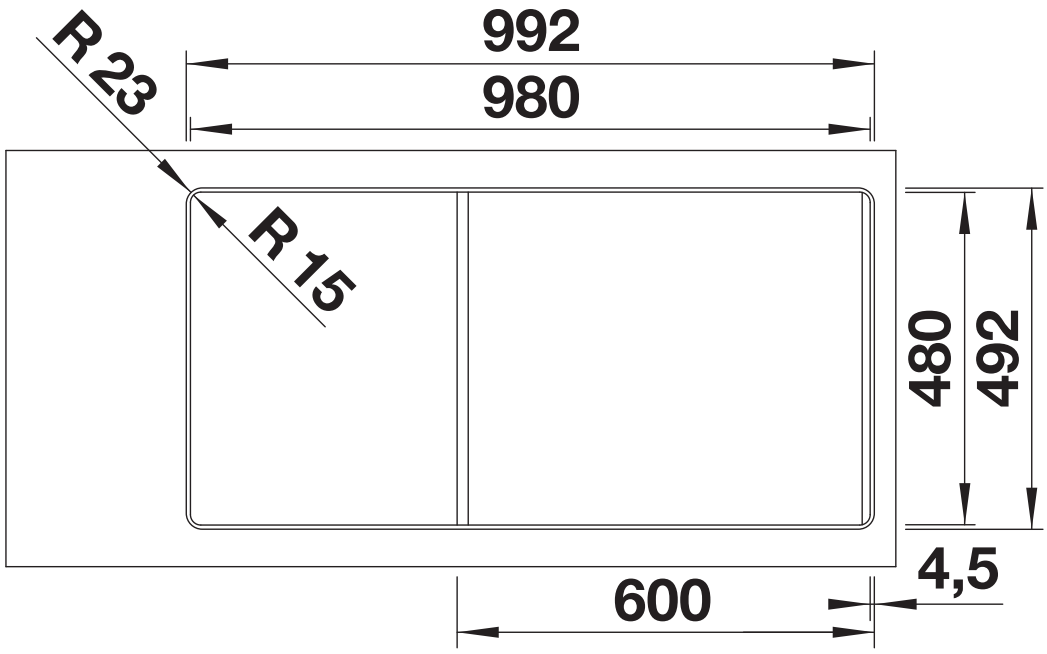

Cut-out

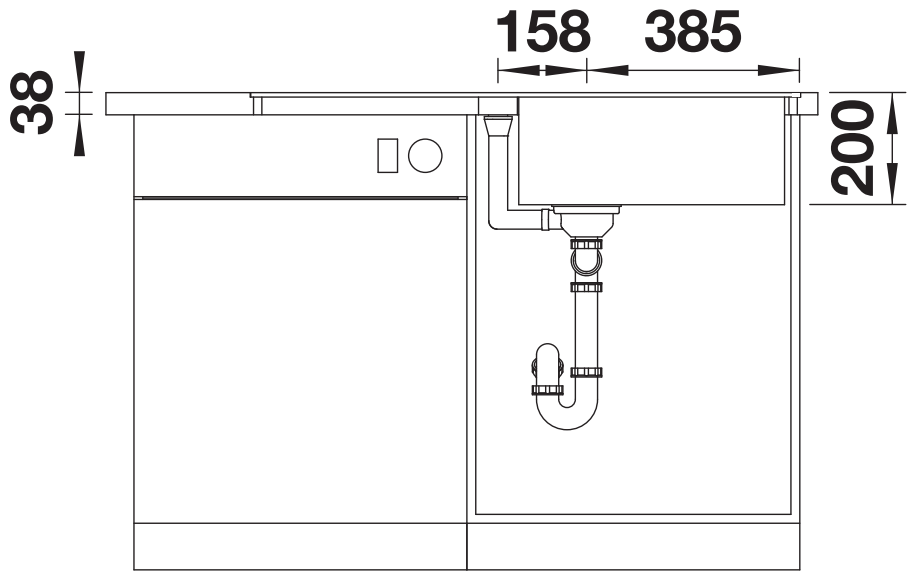

Front view

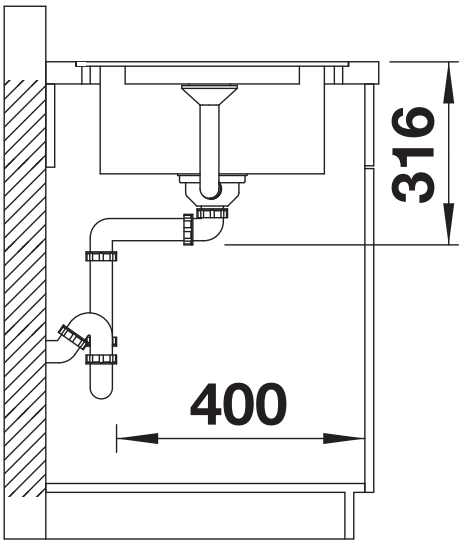

Side view