Product information sheet ADIRA XL 6 S

Item no. 527617

Benefits



- Modern sink in beautiful Silgranit colours with extended functionality
- High level of comfort due to XL bowl combined with a practical drain and a plain drain area
- The multifunctional ADIRA grid is included and can be used to create a top-level on the bowl or as a drainer
- Can be installed reversibly

Colours



Available colours:

black
anthracite
rock grey
volcano grey
white
soft white
tartufo
coffee

SILGRANIT black

Planning information

- Cut out size: 980 x 480 x R15

Scope of supply

- foldable ADIRA grid
- waste kit with space-saving pipe
- 3 ½'' InFino basket strainer with drain remote control (rotary switch)

Details

Min cabinet size	600 mm

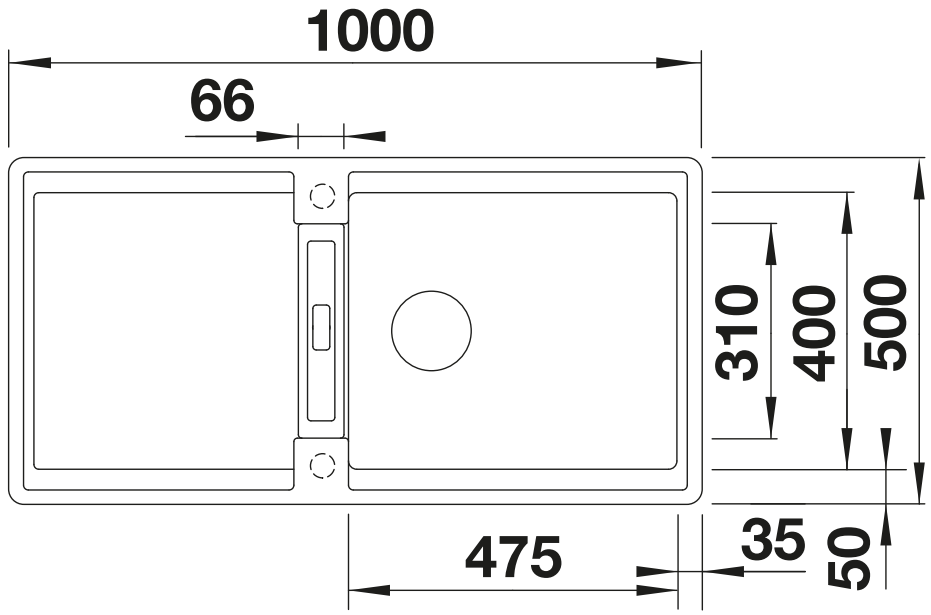

Top view

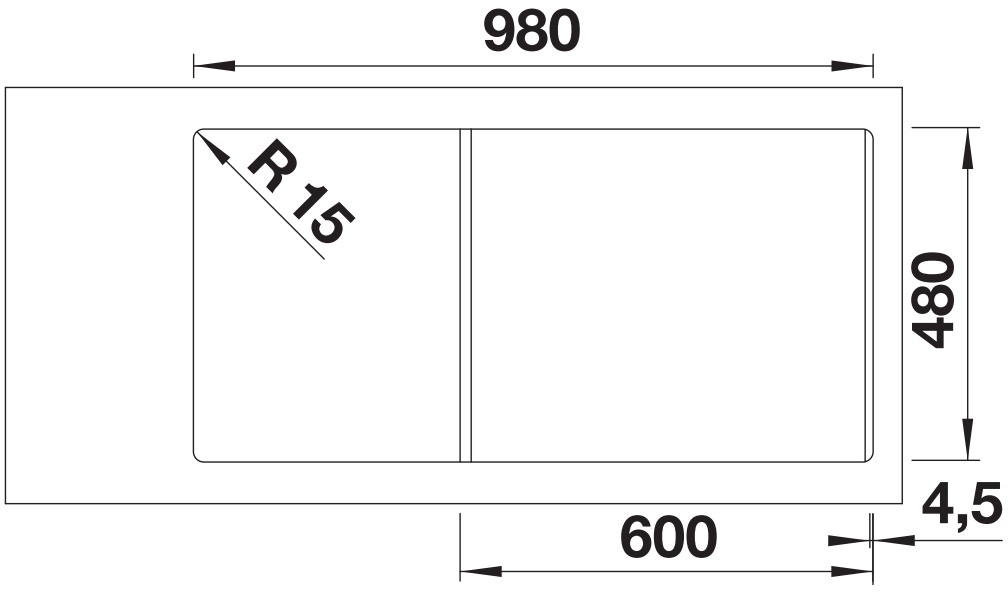

Cut-out

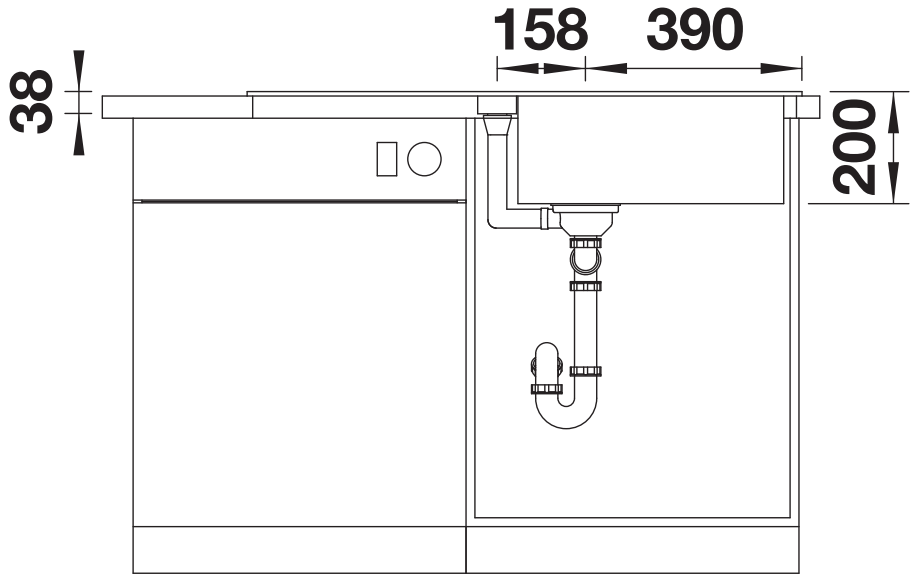

Front view

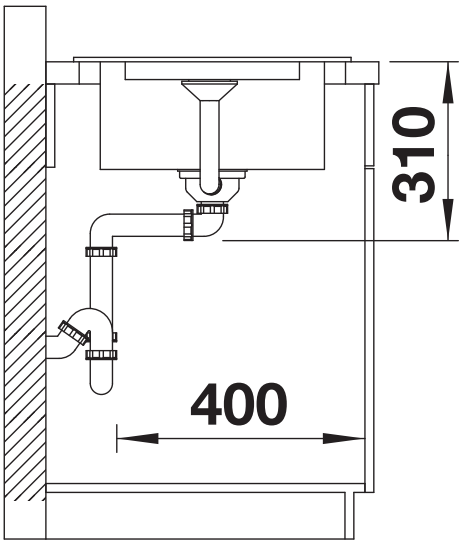

Side view