# Product information sheet ADIRA 6 S-F

Item no. 527615

## Benefits



- Modern sink in beautiful Silgranit colours with extended functionality
- High level of comfort due to XL bowl combined with a practical drain and a plain drain area
- The multifunctional ADIRA grid is included and can be used to create a top-level on the bowl or as a drainer.
- The included colander bin fits in the secondary bowl and is great for prepping tasks with water. It can also be stored in FLEXON II and SELECT II bins in the base cabinet.
- The Multi Match Cutting Board adds and additional level your workspace by resting securely over the sink, creating a stable surface for effortless cutting and chopping while keeping the worktop clear.
- For flushmount installation. Can be installed reversibly

## Colours

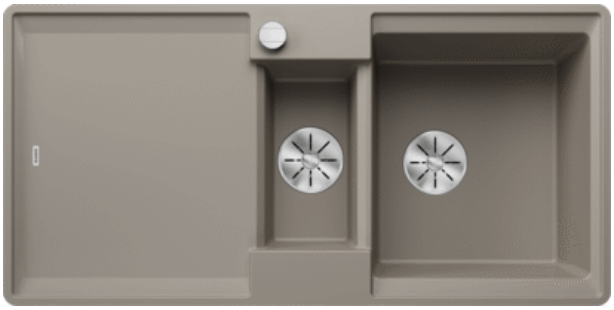

Available colours:

volcano grey
white
coffee
tartufo
soft white
black
anthracite
rock grey

SILGRANIT tartufo

## Scope of supply

- foldable ADIRA grid
- multifunctional plastic colander
- waste kit with space-saving pipe
- 2 x 3 ½'' InFino basket strainer with drain remote control (rotary switch) for the main bowl

## Details

| | |
|---|---|
| Min cabinet size | 600 mm |

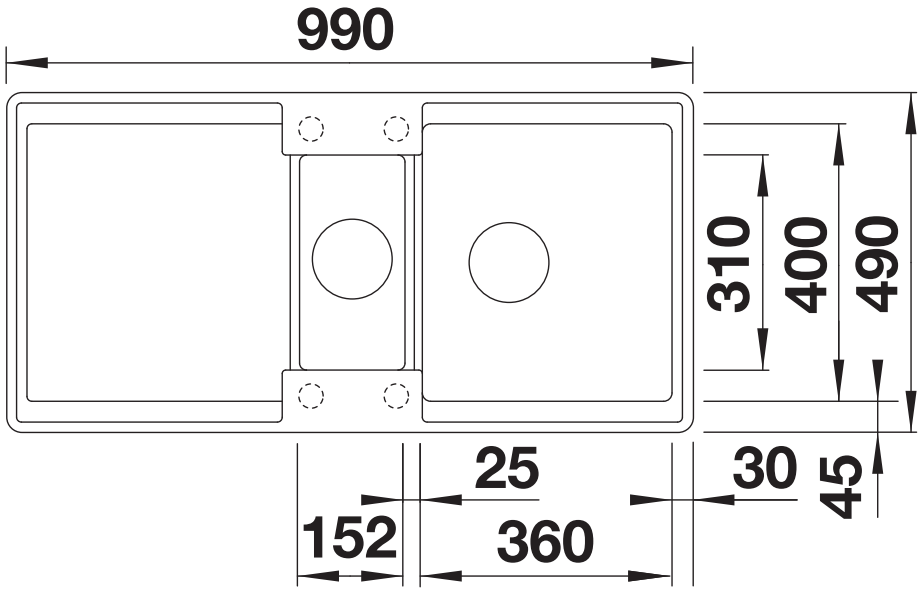


Top view

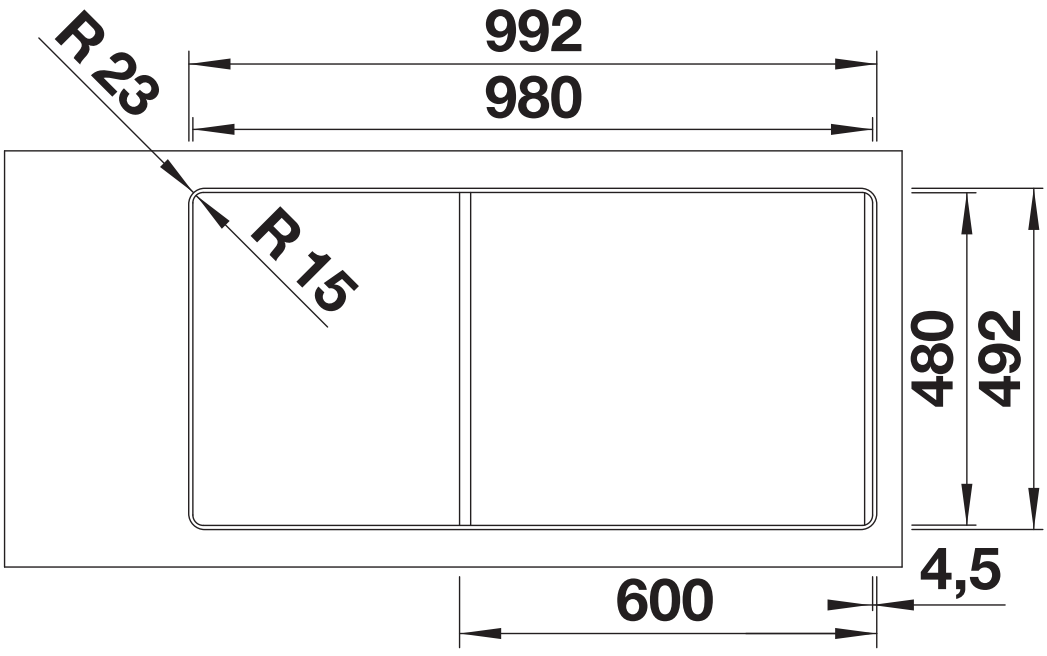


Cut-out

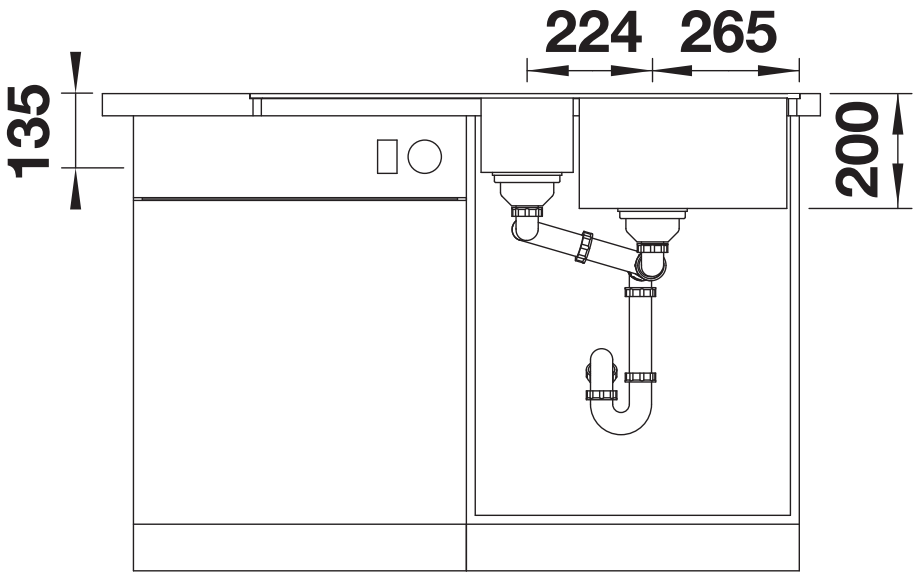


Front view

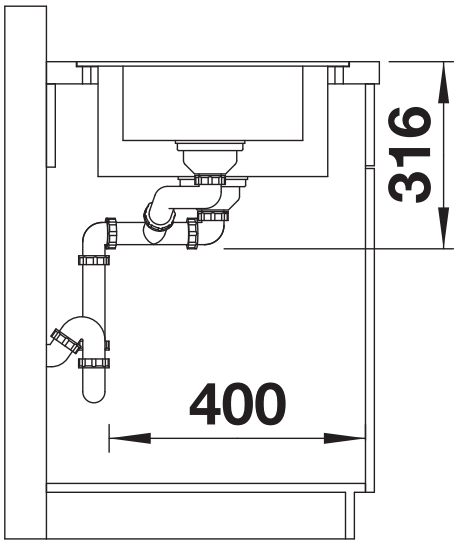


Side view