Product information sheet ETAGON XL 6 S-F

Item no. 528103

Benefits

- Staggered sink with added functionality and spacious draining board
- Integrated step creates an additional functional level
- Clever system concept with versatile ETAGON rails
- High-quality features with the covered C-overflow and InFino drain system – elegantly integrated and easy-care
- Flushmount version

Colours



Available colours:

white
anthracite
coffee
black
rock grey
volcano grey
soft white
tartufo

SILGRANIT volcano grey

Scope of supply

- 2 x ETAGON rails in stainless steel
- waste kit with space-saving pipe
- 3 ½'' InFino basket strainer with drain remote control (PushControl)

Details

Min cabinet size	600 mm

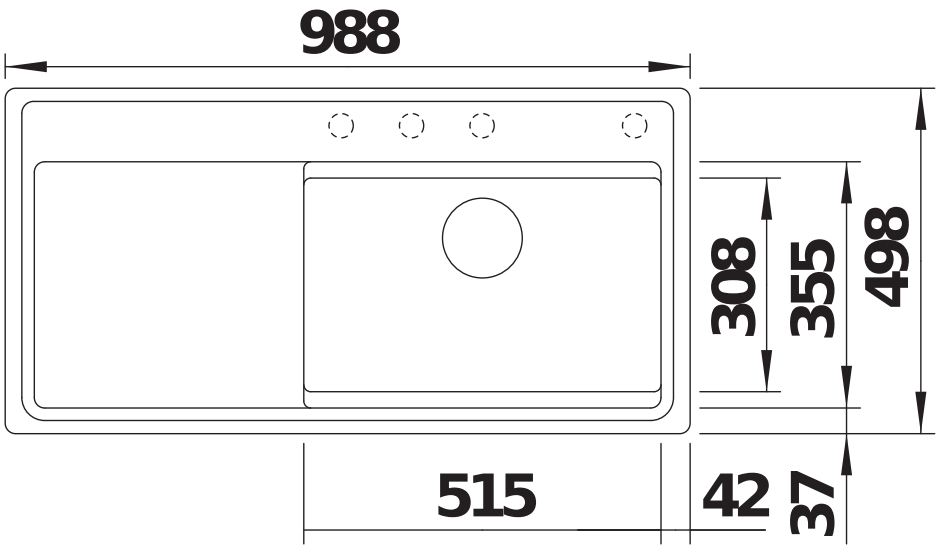

Top view

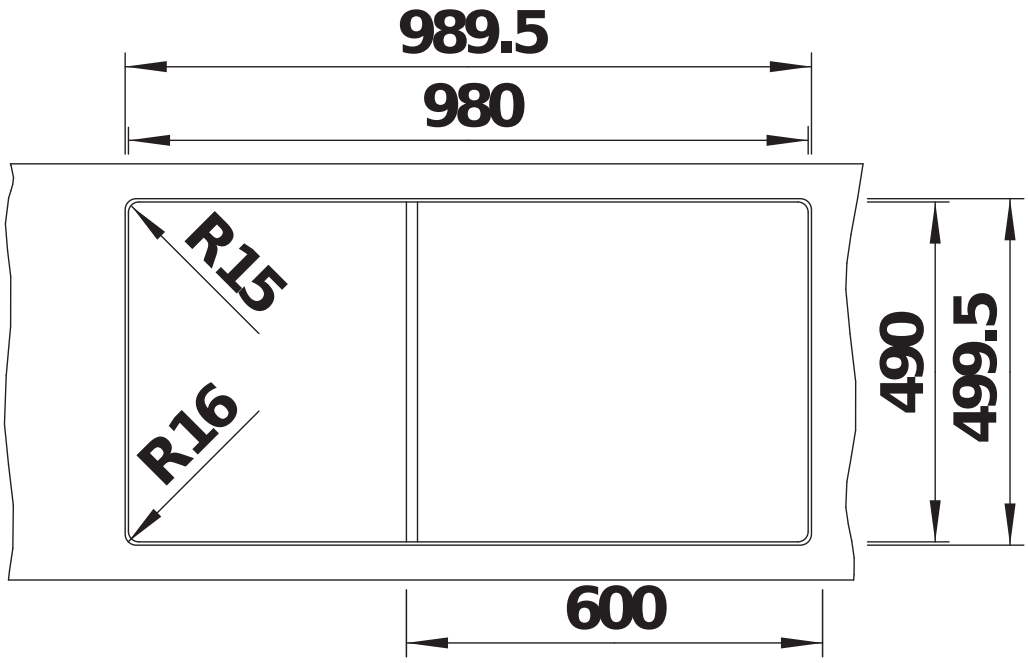

Cut-out

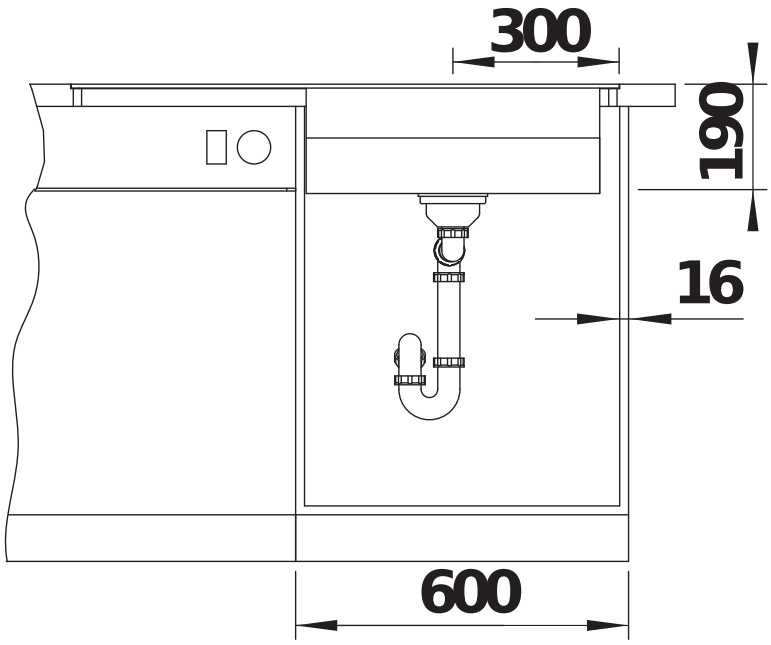

Front view

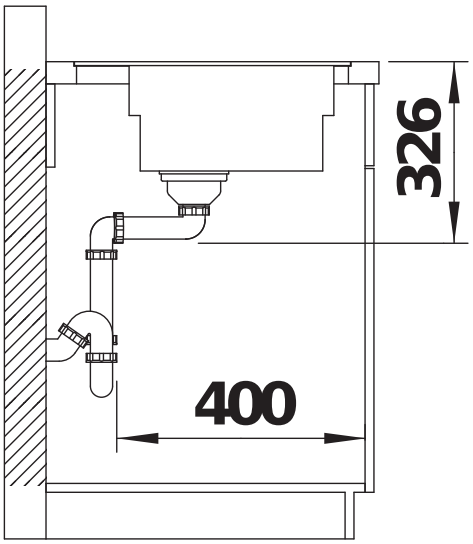

Side view