Product information sheet SUBLINE 500-U for Coloured Components

Item no. 527796

Benefits



- Maximum colour flexibility by choosing complementing waste fitting set in satin gold, black matt, satin dark steel or satin platinum metal finishes (to be ordered with separate article number)
- Undermount bowl for discerning demands on design
- Timelessly elegant, contoured bowl design
- Entire system for a wide variety of plans featuring large and small bowls
- High-quality features with covered C-overflow and InFino drain system – elegantly integrated and easy-care
- Optional versatile accessories are available

Colours



Available colours:

black
anthracite
rock grey
volcano grey
white
soft white
tartufo
coffee

SILGRANIT soft white

Planning information

- Cut-out radius: 10 mm
- Drainage components must be ordered separately.
- Please order drain connections for combinations of two individual bowls separately.

Scope of supply

- fixing kit

Details

Min cabinet size	600 mm

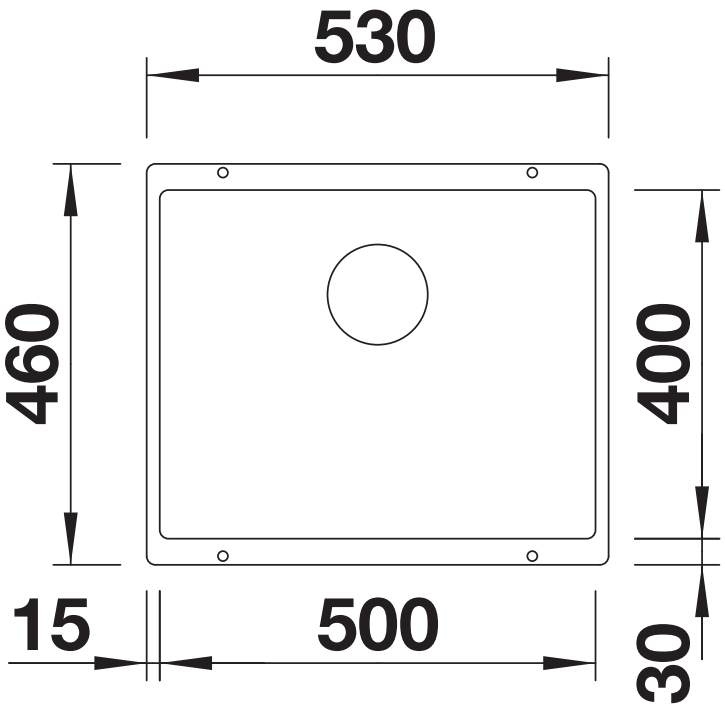

Top view

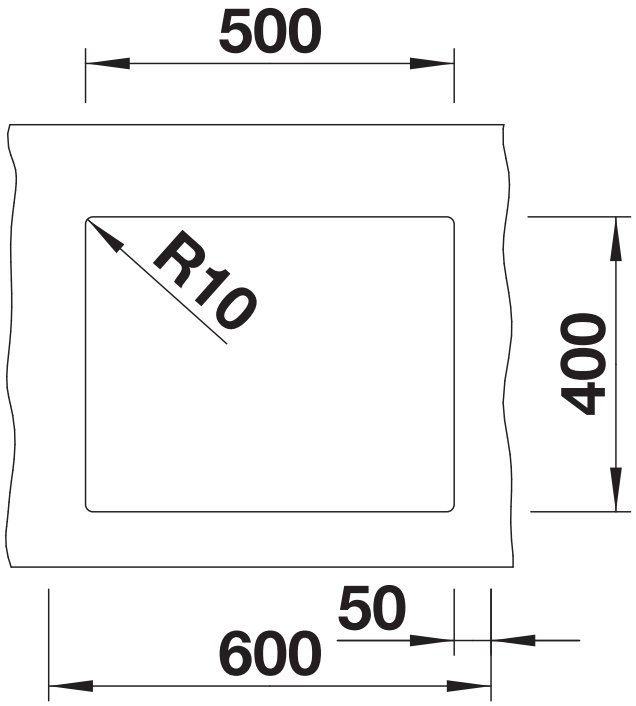

Cut-out

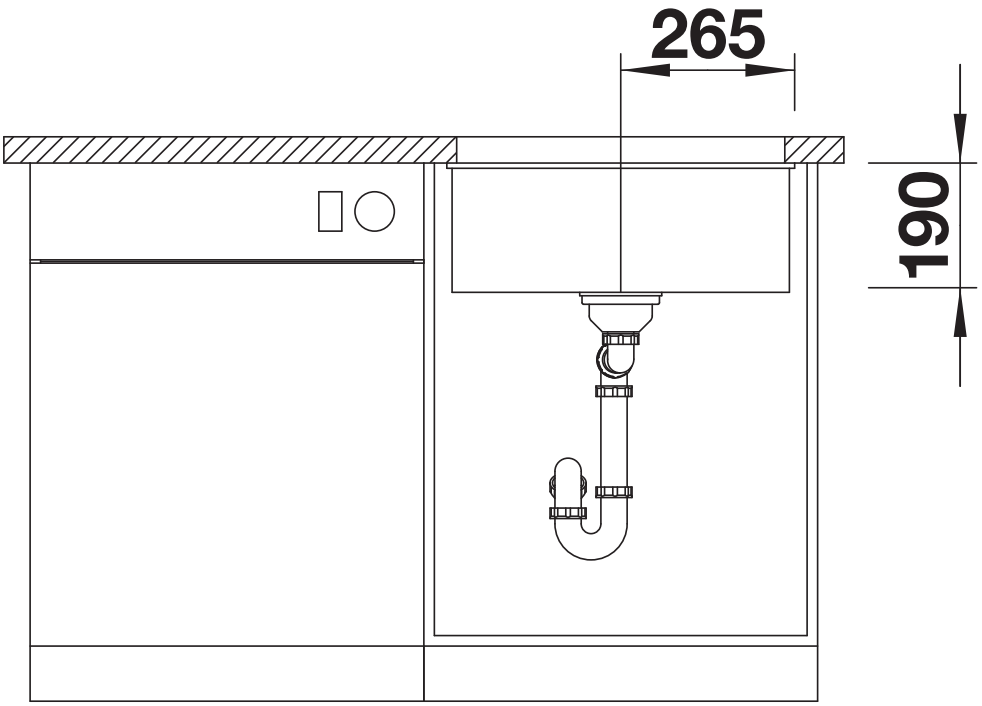

Front view

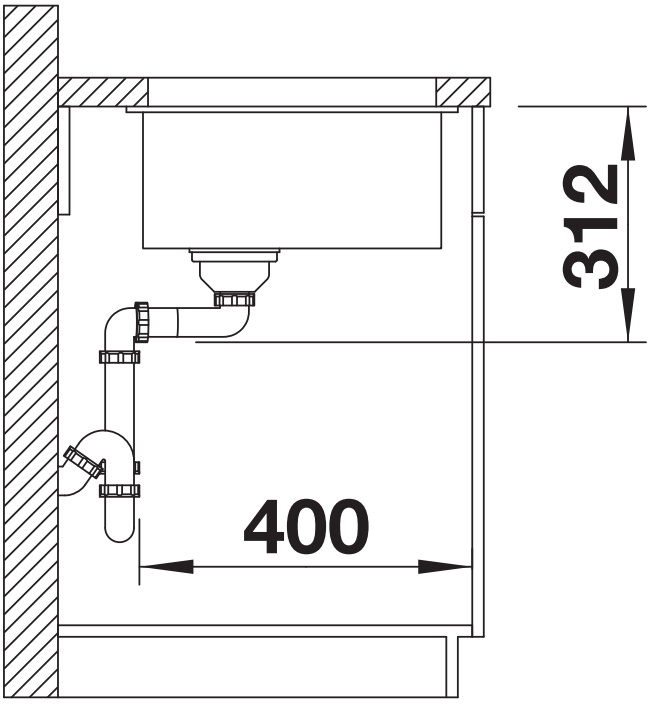

Side view