Product information sheet PLEON 8 for Coloured Components

Item no. 527779

Benefits



- Maximum colour flexibility by choosing complementing waste fitting set in satin gold, black matt, satin dark steel or satin platinum metal finishes (to be ordered with separate article number)
- Timelessly elegant, straight-lined design
- Single bowl with maximum volume thanks to particularly deep bowl
- Continuous, generous tap ledge and low-profile rim
- Easy to clean, flowing transition from the sink's rim to the tap ledge
- High-quality features with the covered C-overflow and InFino drain system – elegantly integrated and easy-care
- Compatible with the BLANCO Multi Match Accessory Set: larger PLEON bowls let you create separate work zones with the Accessory Bundle and Cutting Board—so you can prep, rinse and drain efficiently at the sink.

Colours

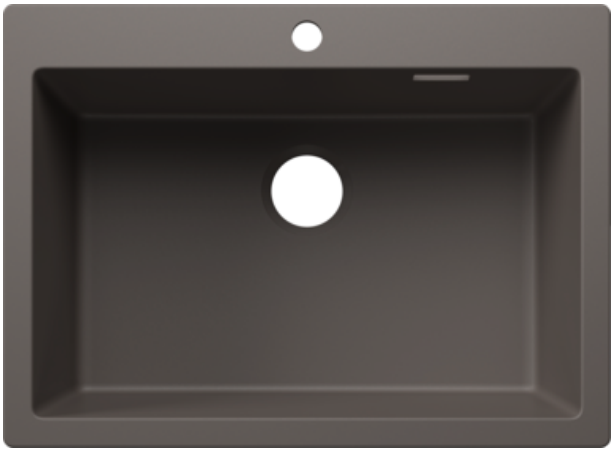

Available colours:

soft white
anthracite
volcano grey
rock grey
black
coffee
white
tartufo

SILGRANIT volcano grey

Planning information

- The optional ash compound chopping board can only be placed on the edge of the bowl if the diameter of the kitchen mixer tap is less than 48 mm.
- Drainage components must be ordered separately.

Details

Min cabinet size	800 mm

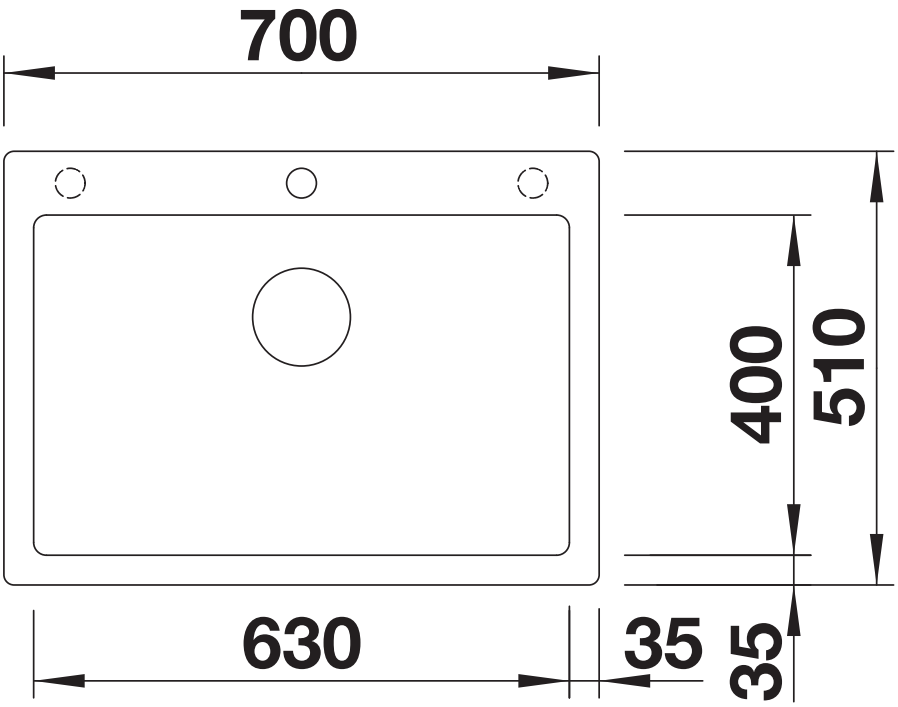

Top view

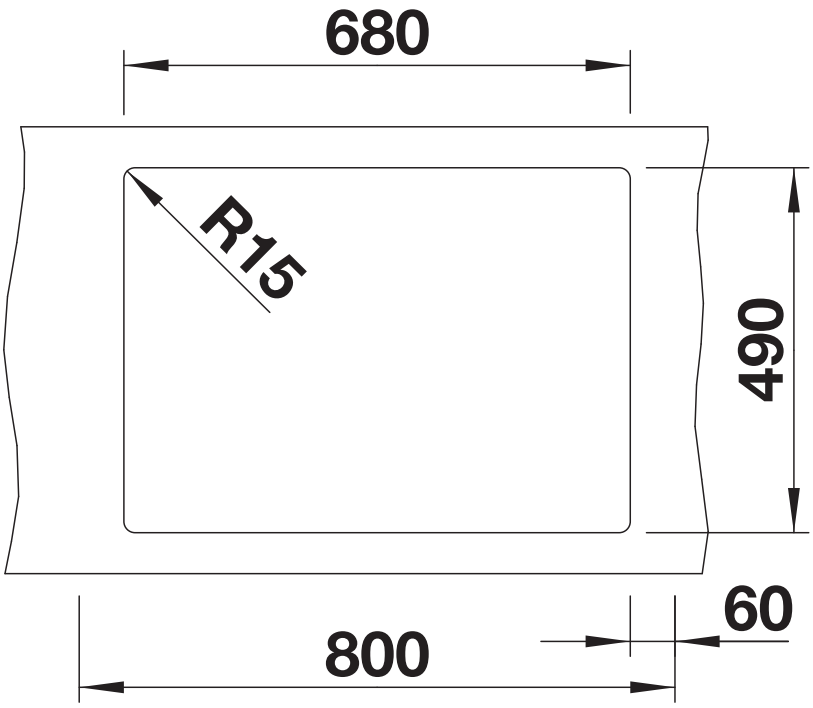

Cut-out

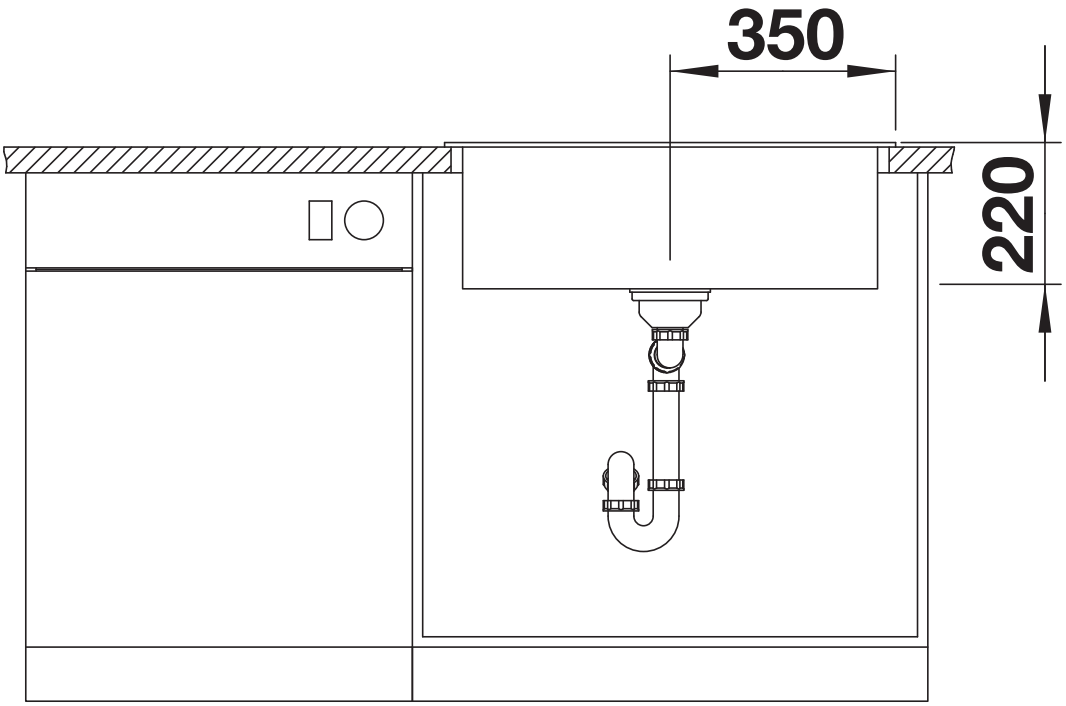

Front view

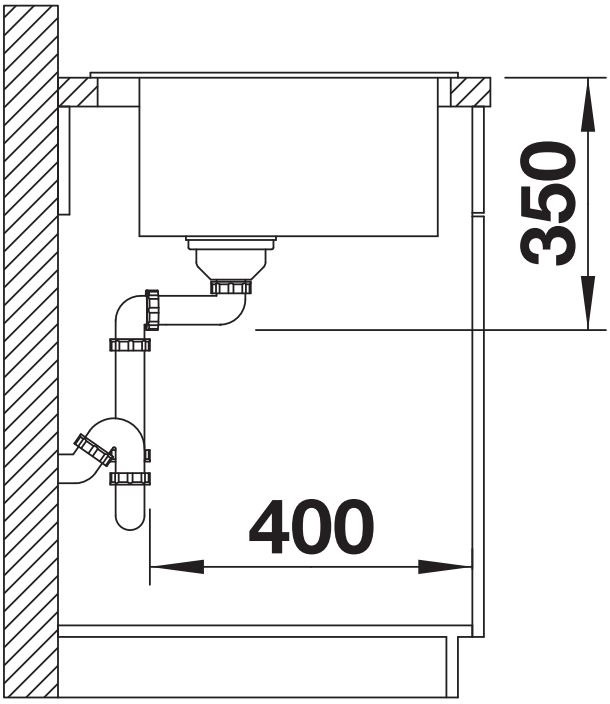

Side view