Product information sheet ETAGON 500-U for Coloured Components

Item no. 527756

Benefits



- Greater colour flexibility by choosing complementing waste fitting set in satin gold, black matt, satin dark steel or satin platinum metal finishes (to be ordered with separate article number)
- Generous staggered bowl with added functionality
- Integrated step creates an additional functional level
- Clever system concept with versatile ETAGON rails – available in satin gold, black matt, satin dark steel or satin platinum metal finishes (to be ordered with separate article number)
- High-quality features with the covered C-overflow and InFino drain system – elegantly integrated and easy-care
- For undermount installation, ideal in combination with high-quality worktops

Colours



Available colours:

black
anthracite
rock grey
volcano grey
white
soft white
tartufo
coffee

SILGRANIT soft white

Planning information

- Cut-out radius: 20 mm
- Drainage components must be ordered separately.

Scope of supply

- 2 x ETAGON rails in stainless steel
- fixing kit

Details

Min cabinet size 600 mm

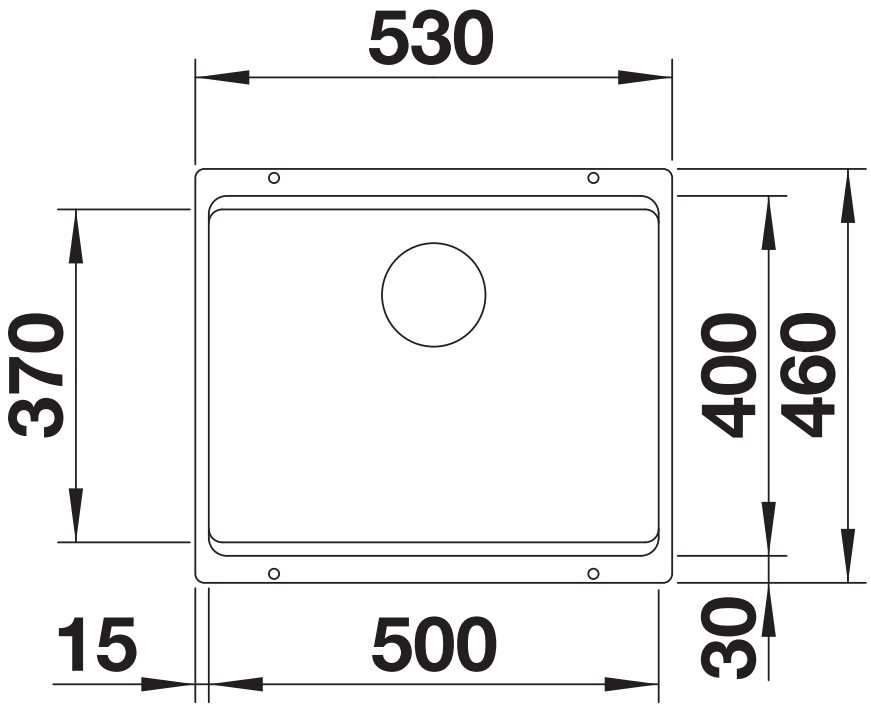

Top view

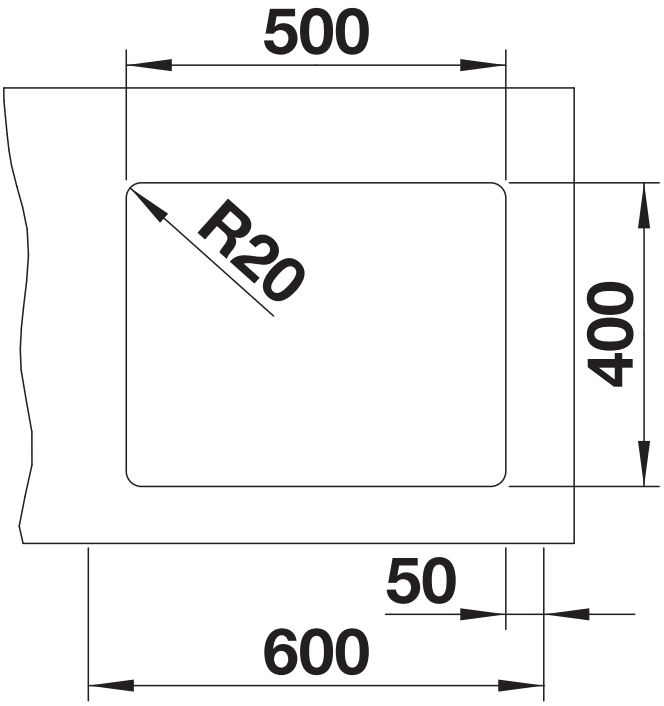

Cut-out

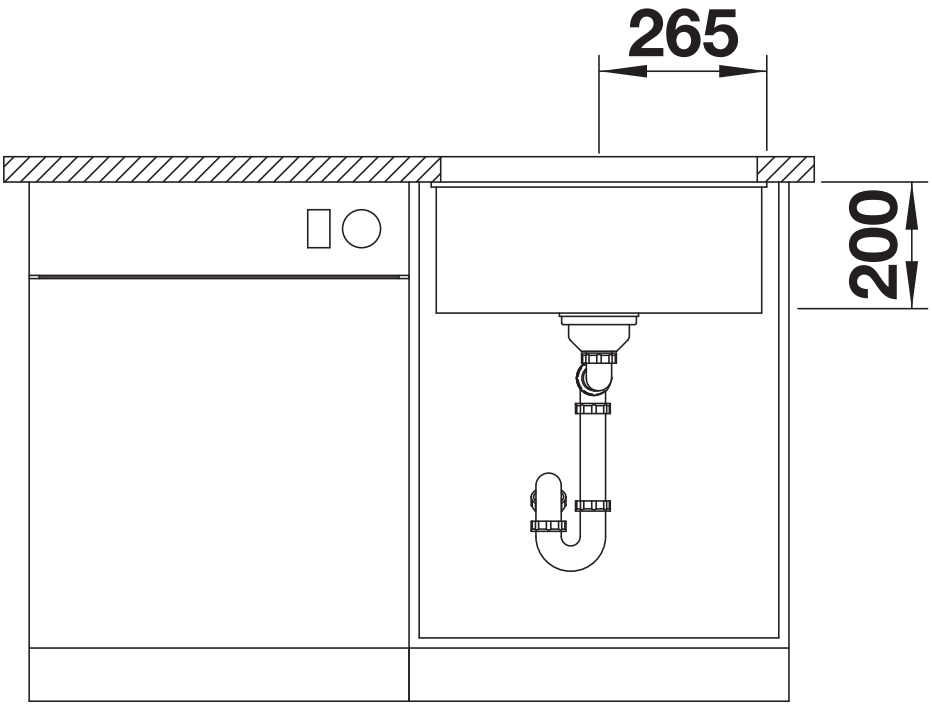

Front view

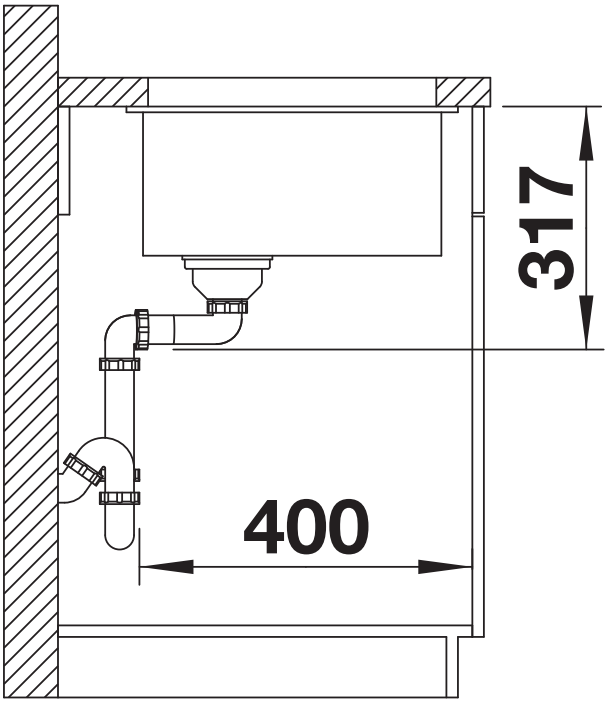

Side view