Product information sheet ETAGON 6-F

Item no. 527689

Benefits



- Generous staggered bowl with added functionality
- Integrated step creates an additional functional level
- Clever system concept with versatile ETAGON rails
- High-quality features with the covered C-overflow and InFino drain system – elegantly integrated and easy-care
- Flushmount version

Colours



Available colours:

black
volcano grey
white
anthracite
coffee
rock grey
tartufo
soft white

SILGRANIT soft white

Planning information

- In the area of the mixer tap, the supporting surface of the sink must be additionally notched on the worktop.
- Model-related detailed dimensions and drawings can be found with the cut-out information online at www.blanco.com.

Scope of supply

- 2 x ETAGON rails in stainless steel
- waste kit with space-saving pipe
- 3 ½'' InFino basket strainer

Details

Min cabinet size	600 mm

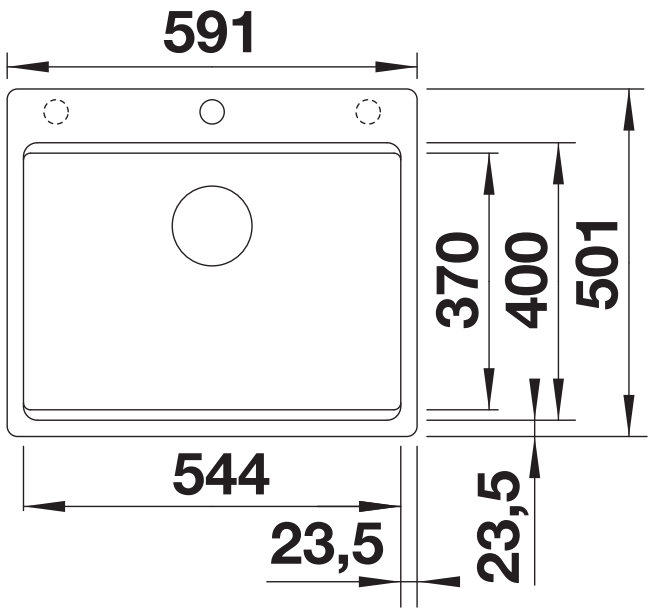

Top view

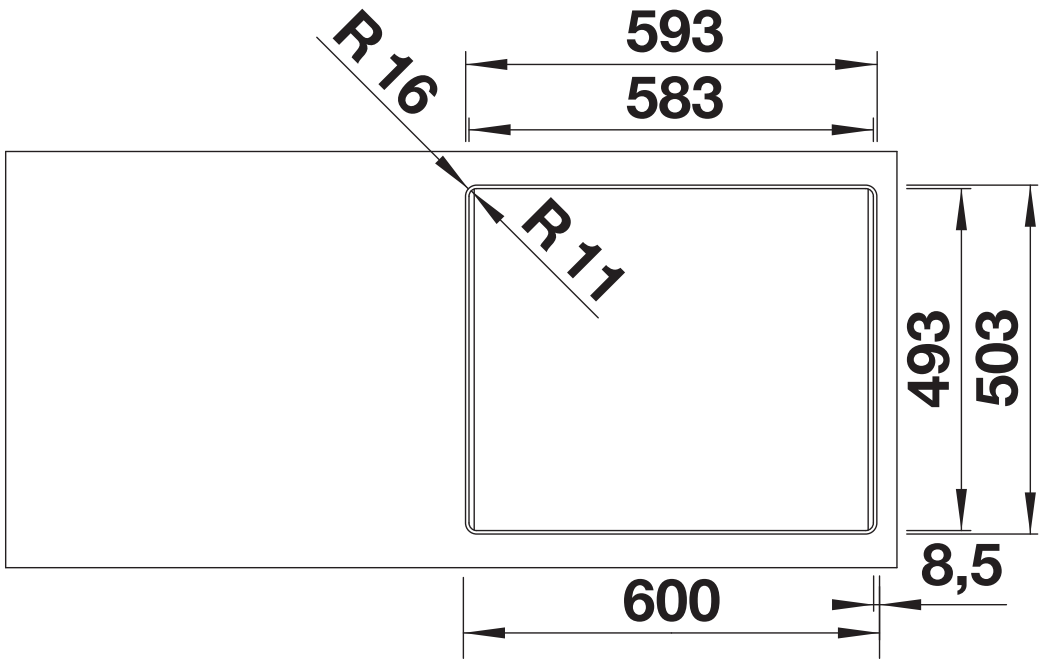

Cut-out

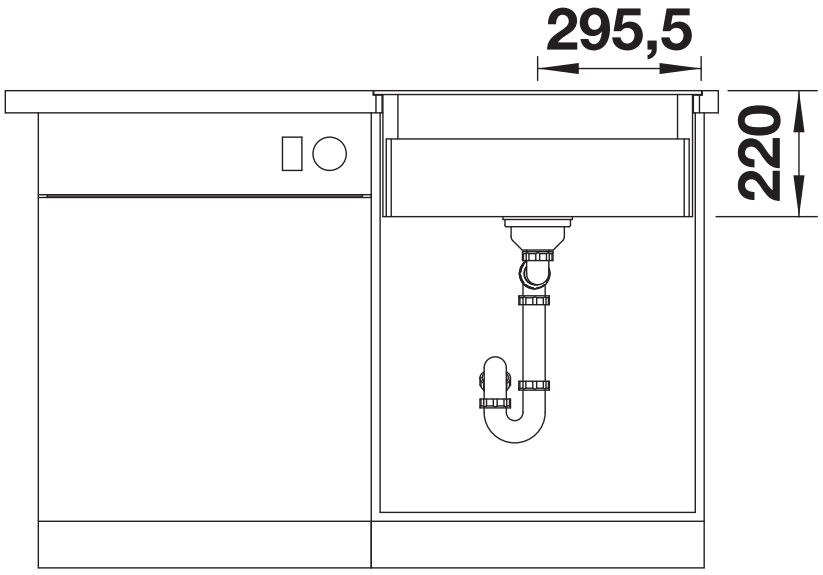

Front view

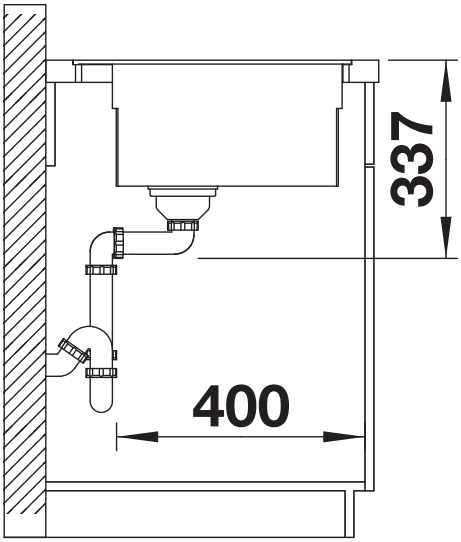

Side view