Product information sheet PLEON 9

Item no. 527639

Benefits



- Timelessly elegant, straight-lined design
- Spacious tap ledge and low-profile rim
- Easy to clean, flowing transition from the sink's rim to the tap ledge
- High-quality features with the covered C-overflow and InFino drain system – elegantly integrated and easy-care

Colours



Available colours:

anthracite
black
white
tartufo
rock grey
volcano grey
coffee
soft white

SILGRANIT volcano grey

Scope of supply

- waste kit with space-saving pipe
- 2 x 3 ½'' InFino basket strainer

Details

Min cabinet size	900 mm

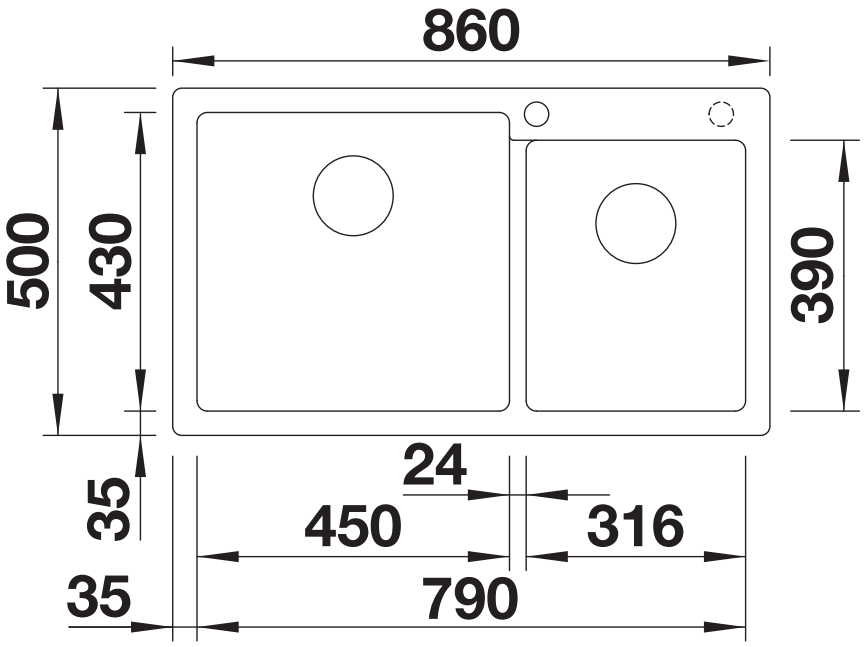

Top view

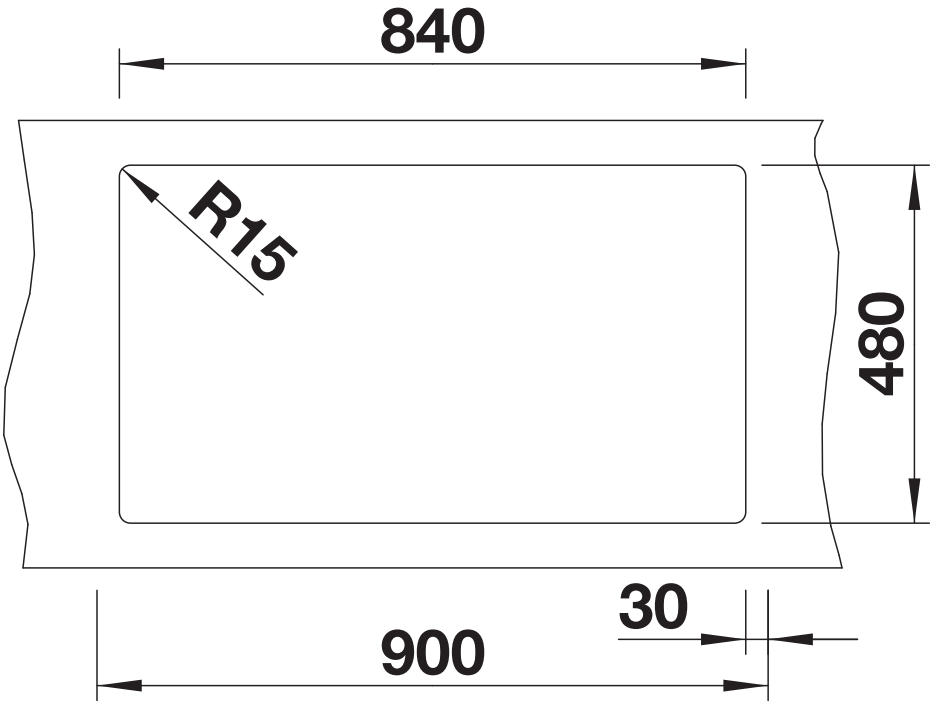

Cut-out

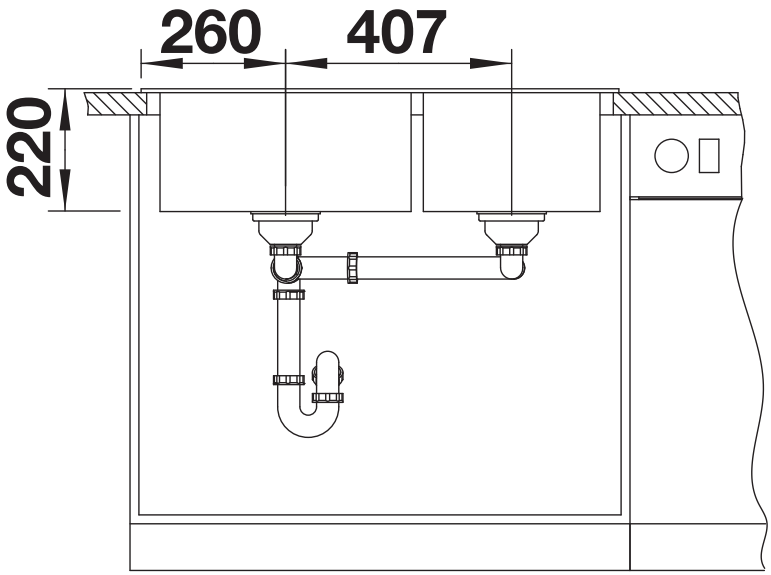

Front view

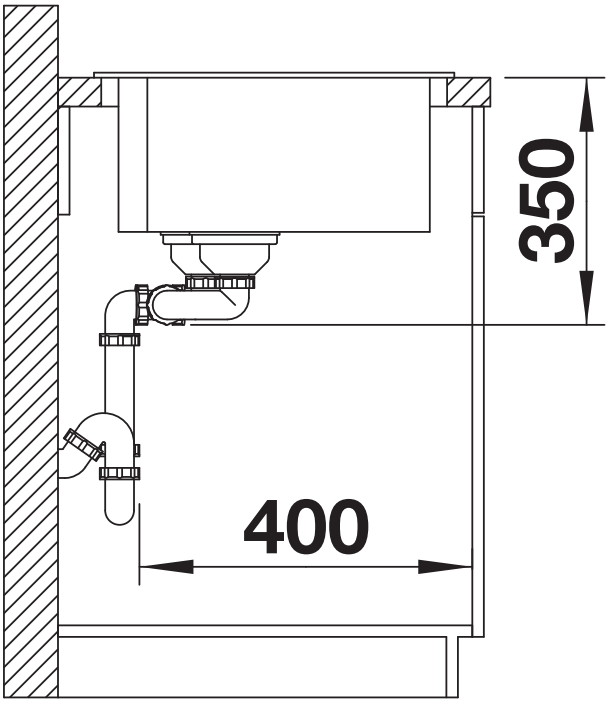

Side view