Product information sheet ALTA II

Item no. 527532

Benefits



- Top-lever mixer tap in slim aesthetic design
- High spout for easy filling of large pots and vases
- 360° swivel spout for more range
- Also available for low-pressure
- Available in Silgranit colours and metallic surfaces for beautiful combinations with the kitchen sink

Colours



Stainless steel rock grey

Available colours:

black
anthracite
volcano grey
coffee
rock grey
soft white
tartufo
white

Scope of supply

- 360° swivel spout for greater reach
- Ø 35 mm tap hole required
- Easy and fast professional mixer tap installation with the BLANCOLock
- With ceramic disk cartridge
- Clear stream aerator
- Flexible connector pipes, 700 mm long and ⅜'' nut
- Stabilisation plate to increase the stability of the tap when fitted in stainless steel sinks

Details

Flow rate	13.1 l
Swivel range	360 °

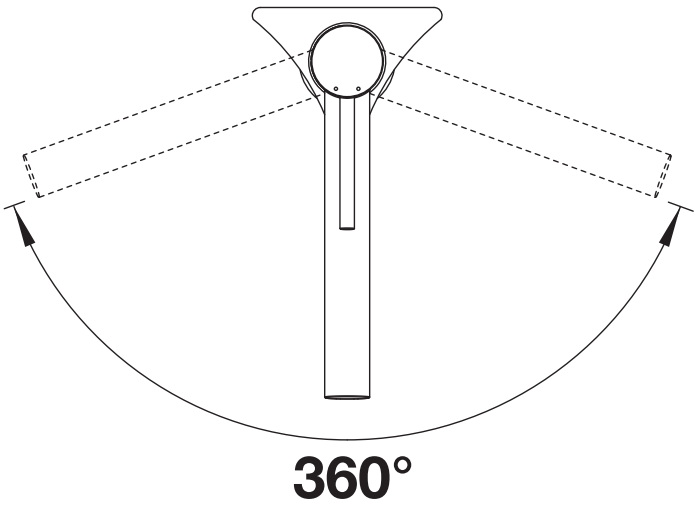

Swivel range

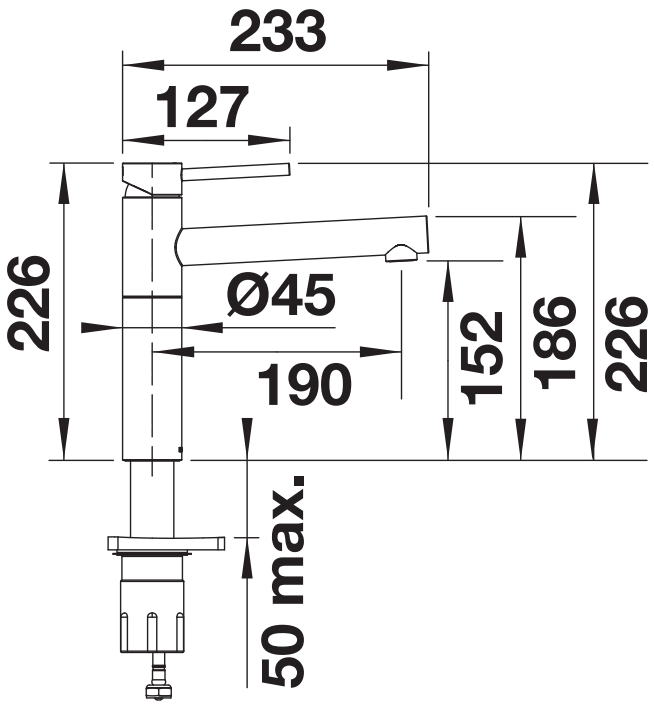

Side view