Product information sheet ZIA XL 6 S Compact

Item no. 527397

Benefits



- Modern design with clear lines
- Extra large bowl for maximum comfort
- Compact outer dimensions thanks to reduced draining area
- Can be installed reversibly

Colours



Available colours:

black
anthracite
volcano grey
white
soft white
coffee

SILGRANIT volcano grey

Planning information

- Cut out size: 760 x 480 x R15, Universal handing

Scope of supply

- waste kit with space-saving pipe
- 3 ½'' basket strainer

Details

Min cabinet size 600 mm

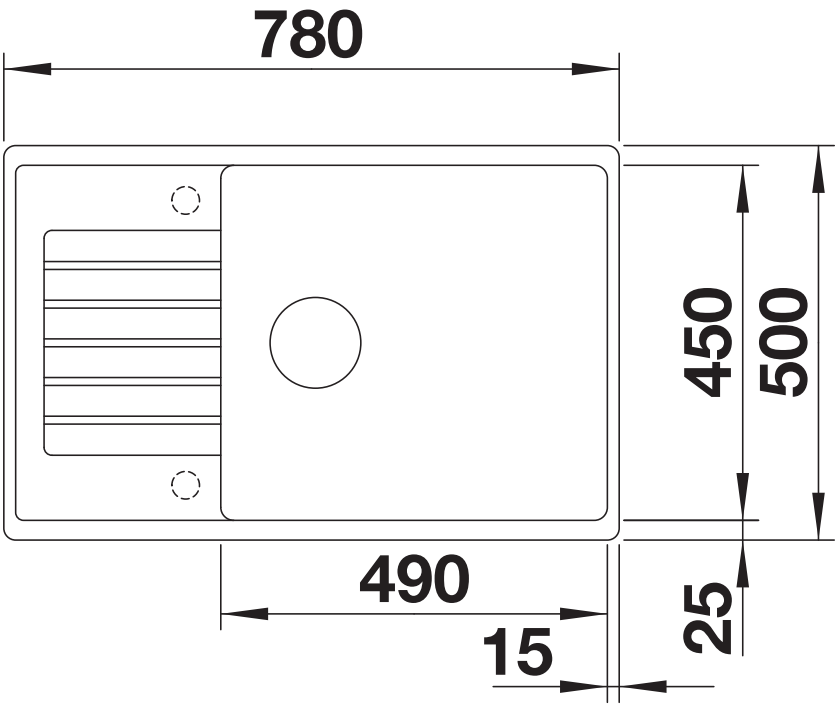

Top view

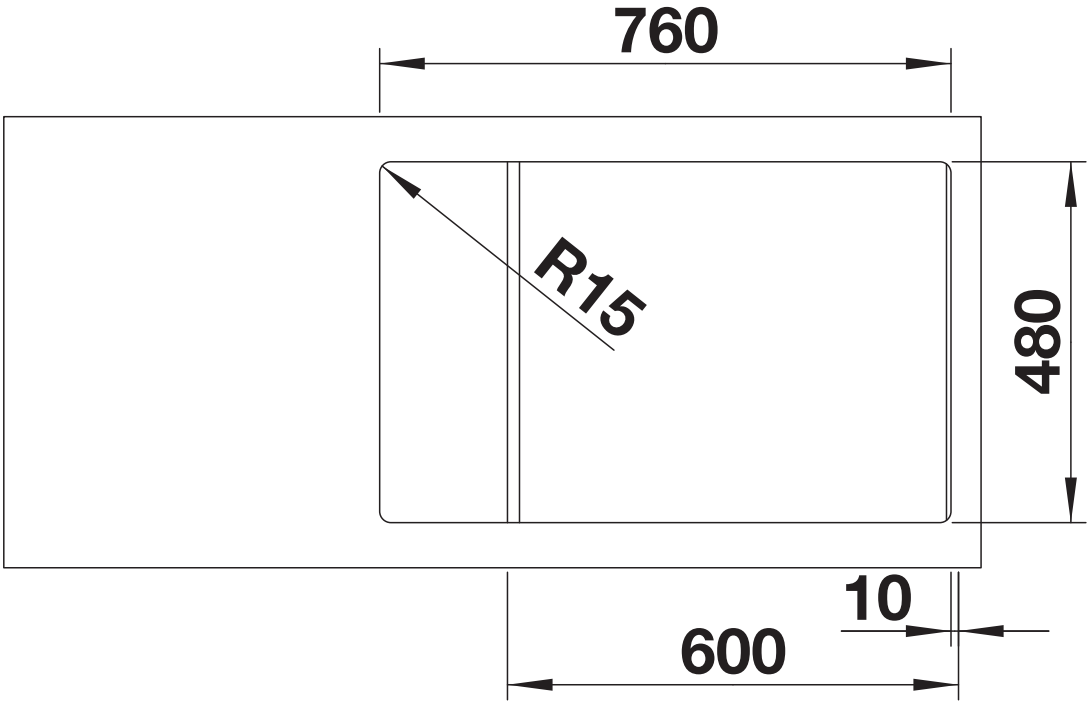

Cut-out

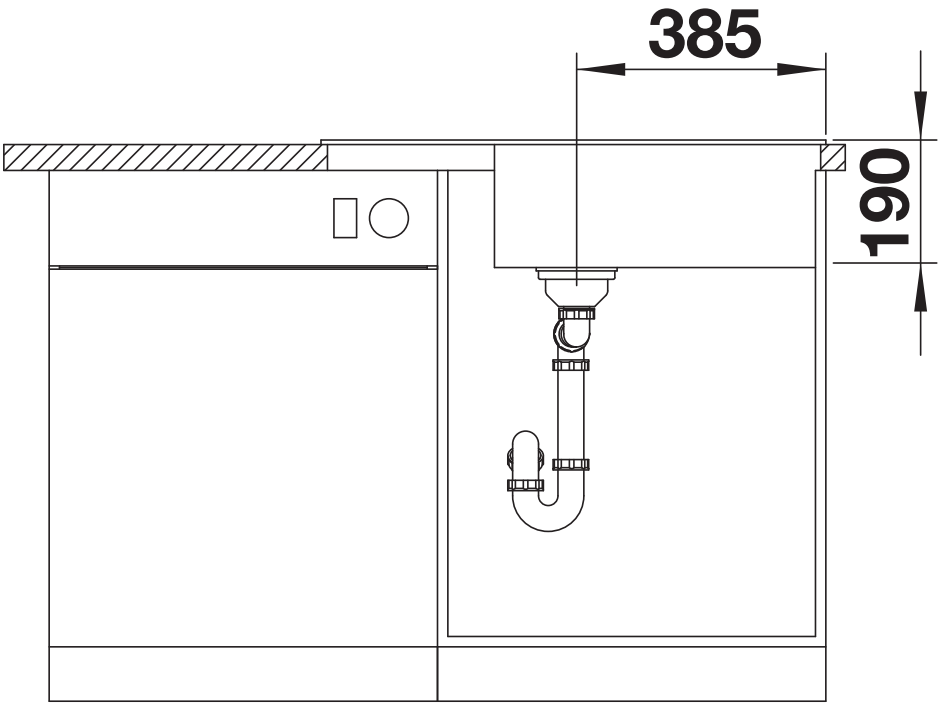

Front view

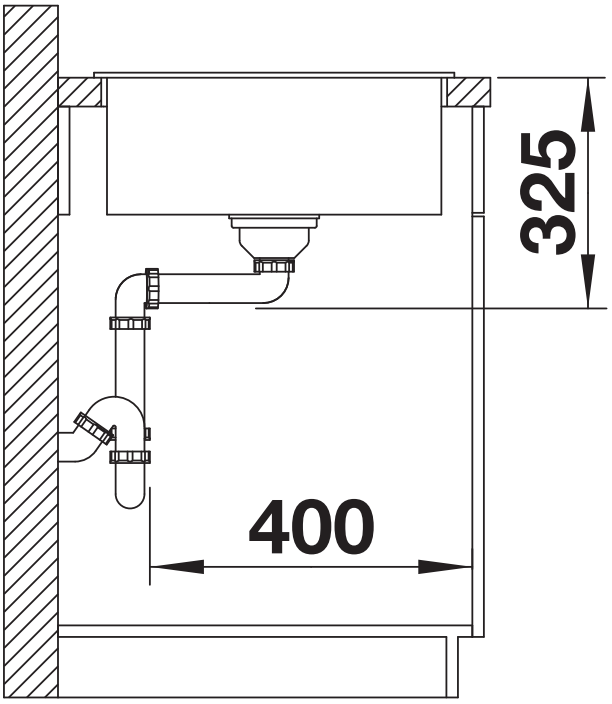

Side view