Product information sheet ZIA 9

Item no. 527393

Benefits



- Modern design with clear lines
- Straight-lined outer contour emphasised by the narrow rim
- Spacious double bowl sink for doing different tasks at the same time

Colours



Available colours:

anthracite
coffee
black
soft white
volcano grey
white

SILGRANIT volcano grey

Scope of supply

- waste kit with space-saving pipe
- 2 x 3 ½'' basket strainer

Details

Min cabinet size	900 mm

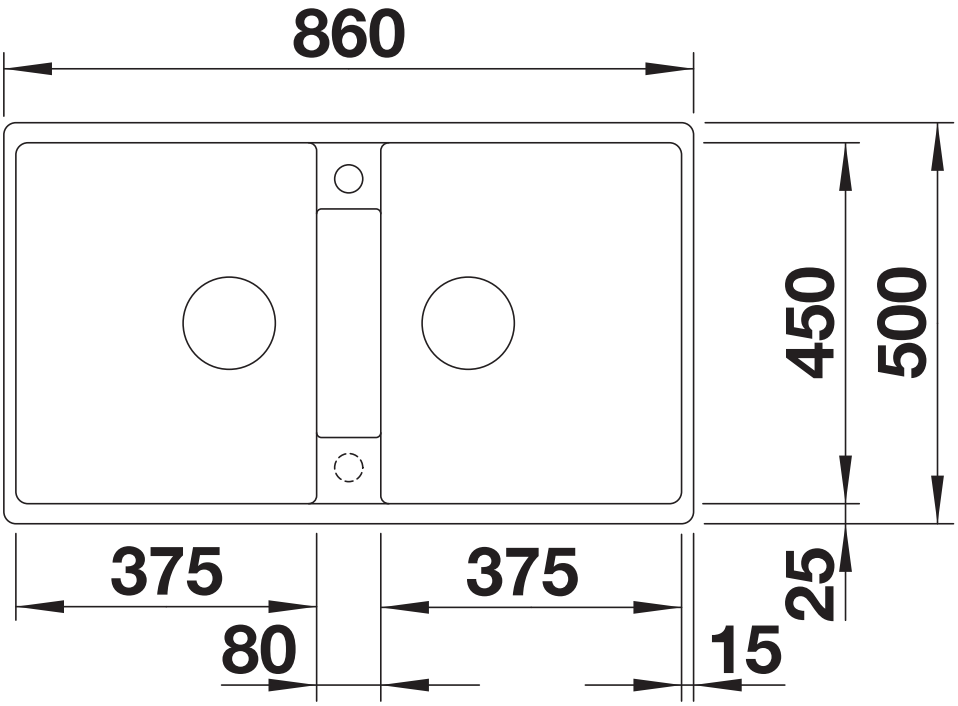

Top view

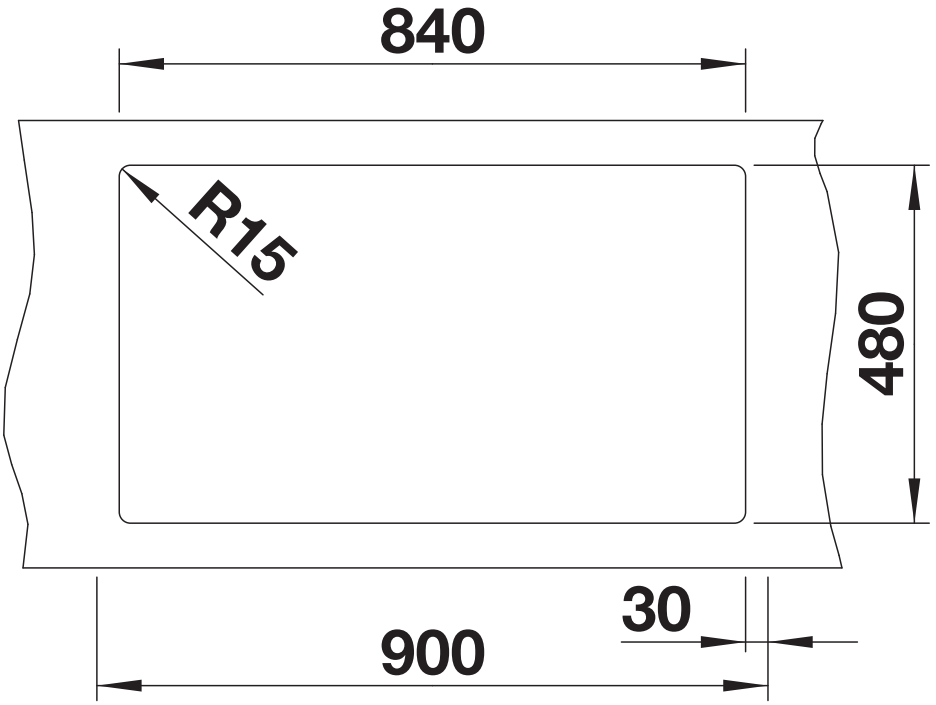

Cut-out

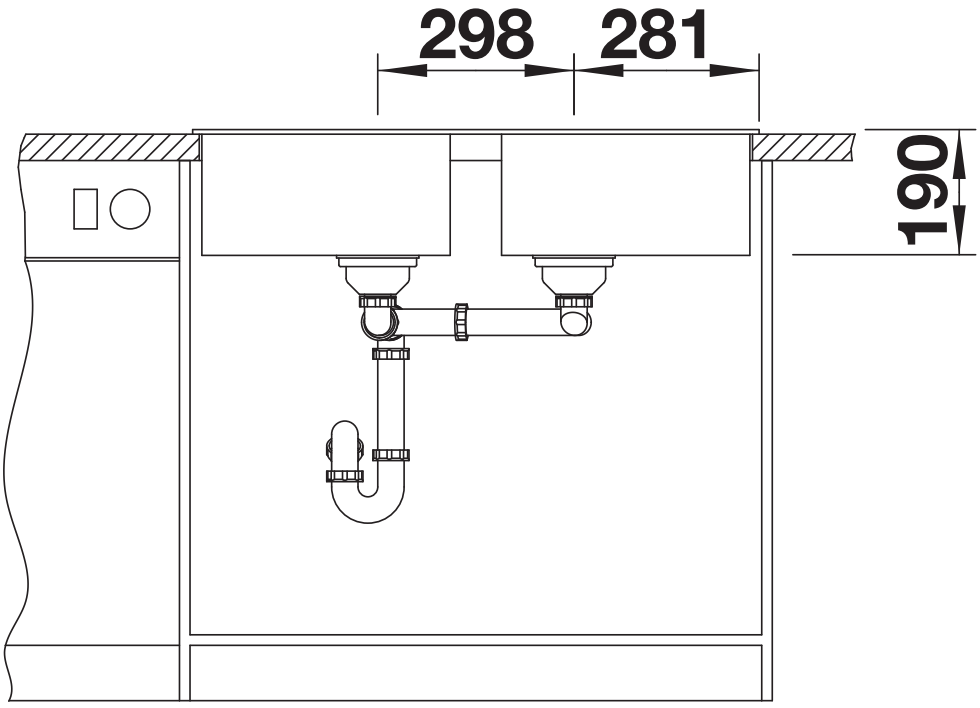

Front view

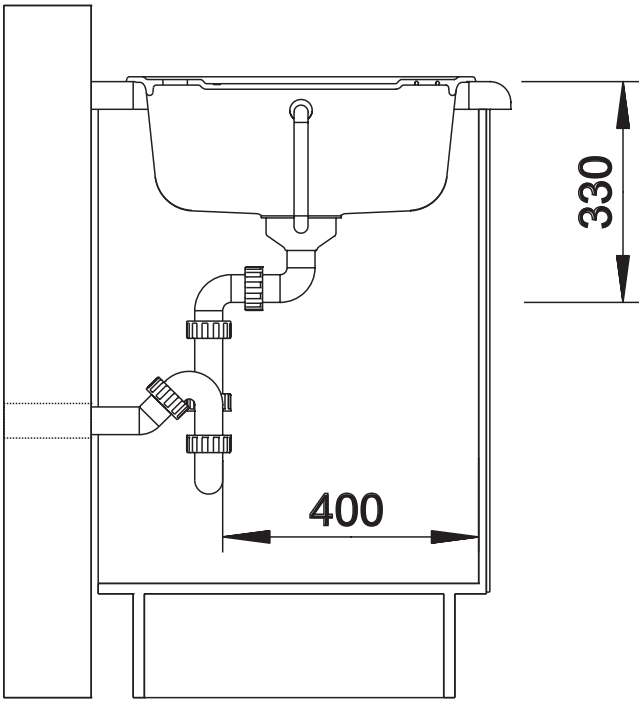

Side view