Product information sheet ZIA 8 S

Item no. 527392

Benefits



- Modern design with clear lines
- Straight-lined outer contour emphasised by the narrow rim
- Characteristic tap ledge as a frame that enlarges the drainer
- Spacious double bowl sink with drainer provides a high degree of comfort
- Classic bowl arrangement for reversible installation

Colours



Available colours:

anthracite
coffee
black
soft white
volcano grey
white

SILGRANIT volcano grey

Scope of supply

- waste kit with space-saving pipe
- 2 x 3 ½'' basket strainer

Details

Min cabinet size	800 mm

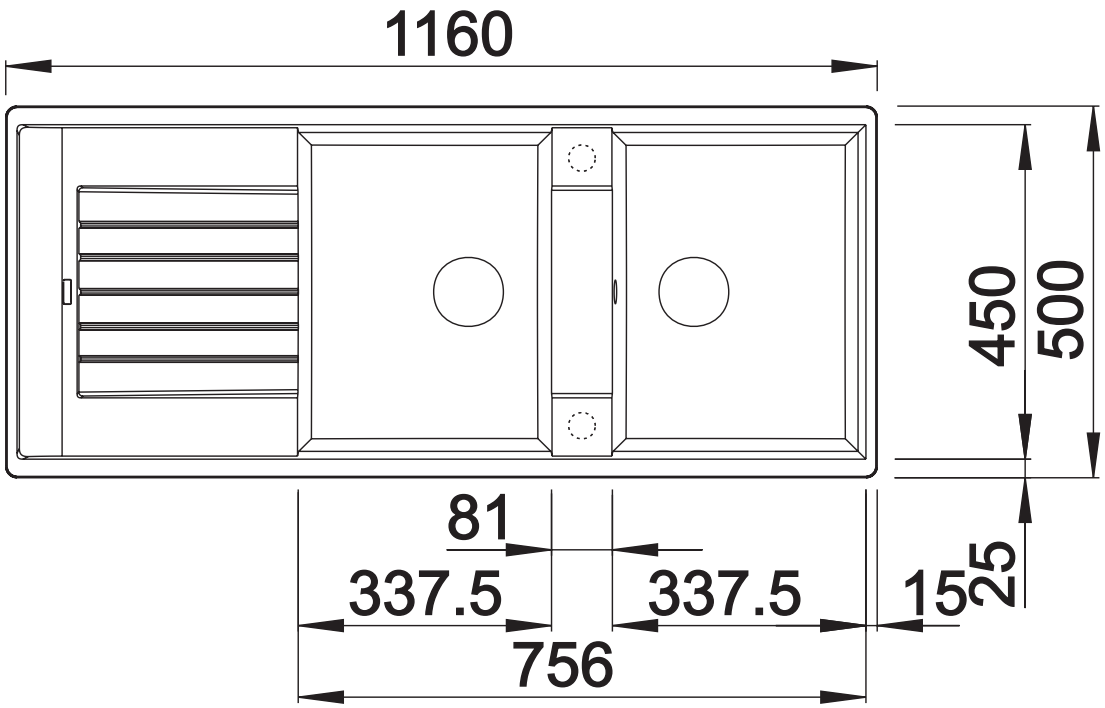

Top view

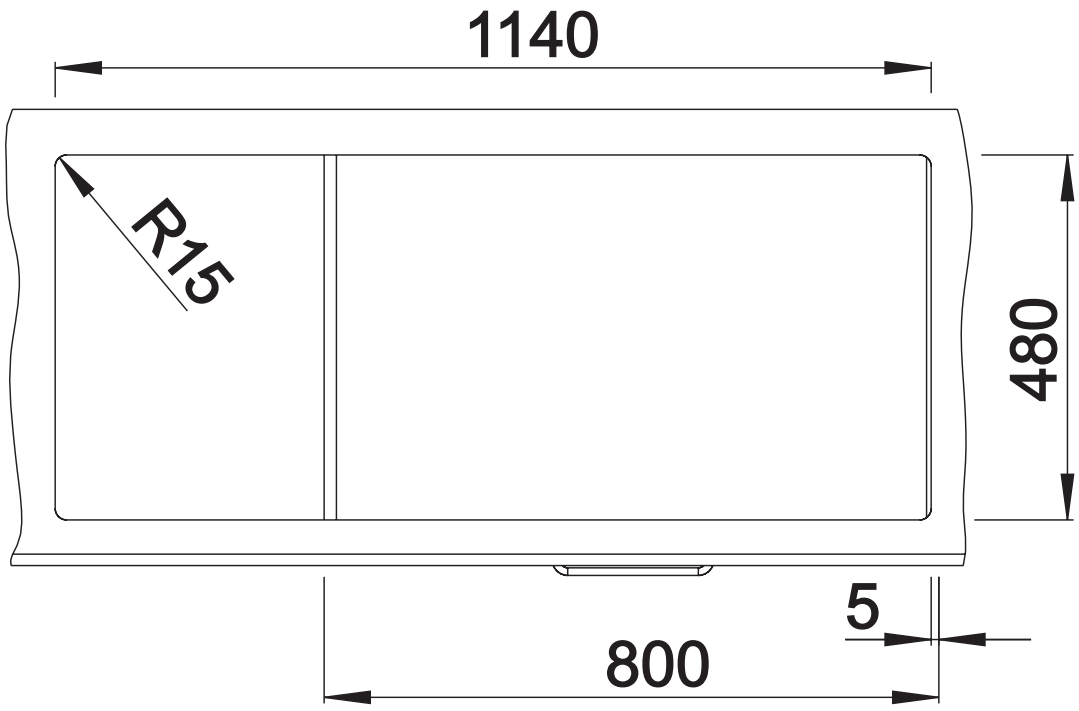

Cut-out

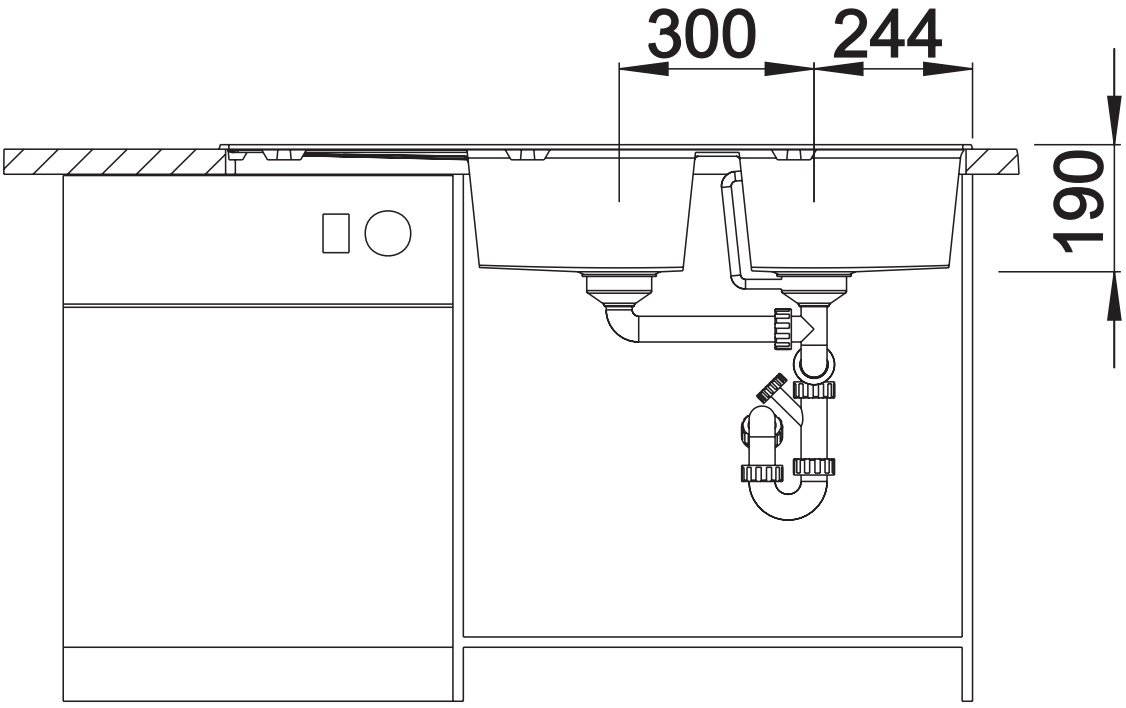

Front view

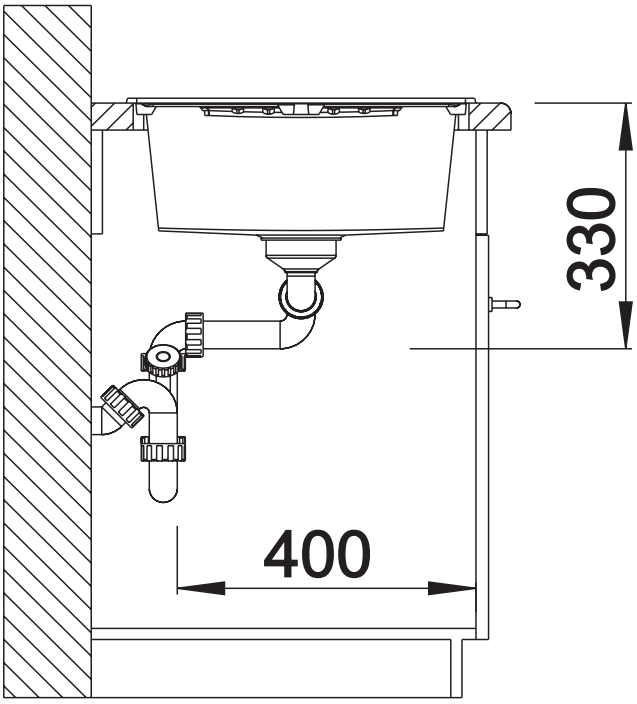

Side view