# Product information sheet ZIA 40 S

Item no. 527378

## Benefits



- Modern design with clear lines
- Straight-lined outer contour emphasised by the narrow rim
- Characteristic tap ledge as a frame that enlarges the drainer
- Spacious bowl size for the 40 cm sink cabinet
- Makes working comfortable – even in tiny kitchens
- Classic bowl arrangement for reversible installation

## Colours



Available colours:

anthracite
white
black
soft white
volcano grey
coffee

SILGRANIT volcano grey

## Scope of supply

- waste kit with space-saving pipe
- 3 ½'' basket strainer

## Details

| | |
|---|---|
| Min cabinet size | 400 mm |

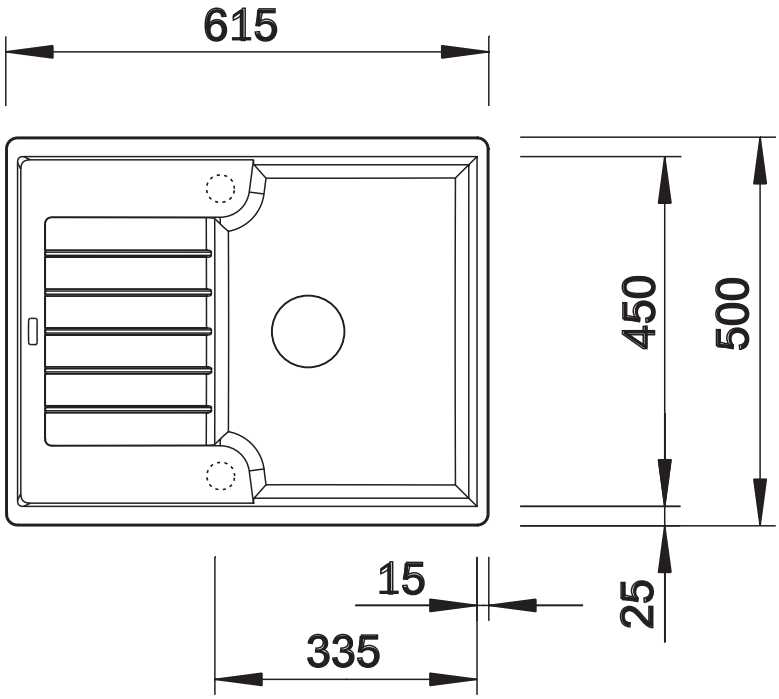


Top view

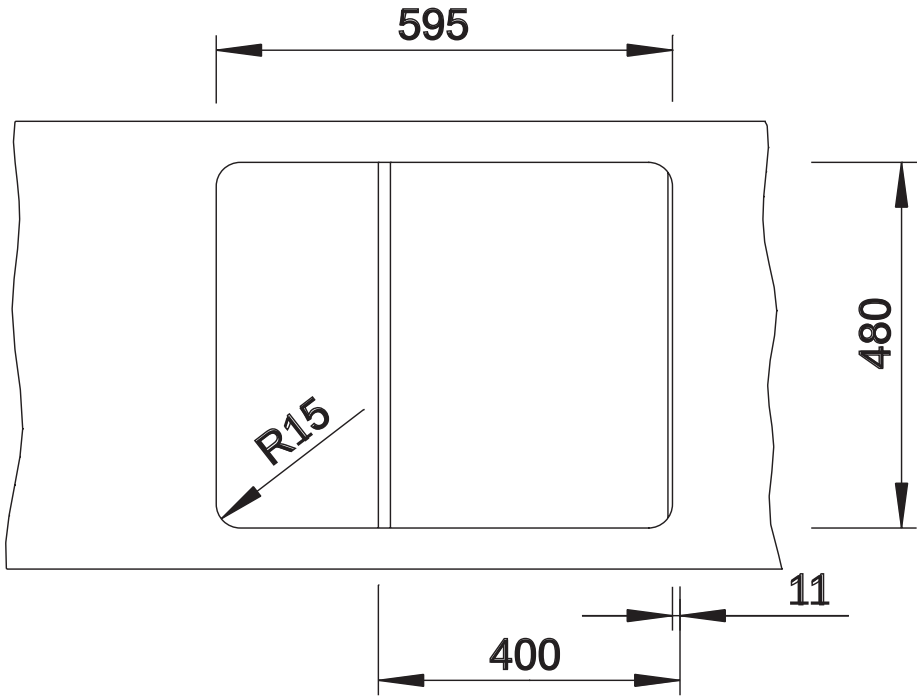


Cut-out

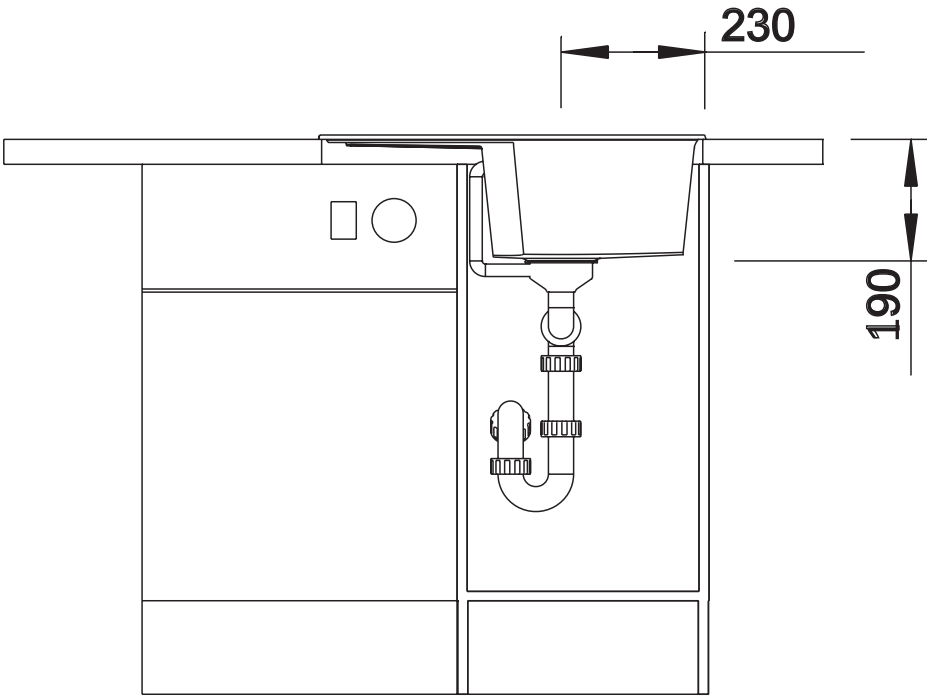


Front view

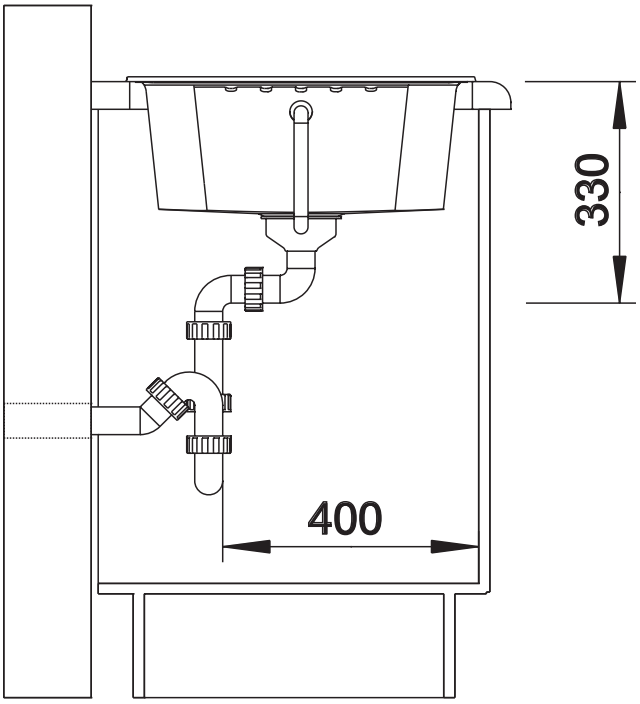


Side view