Product information sheet ZENAR 5 S-F

Item no. 527366

Benefits



- Particularly large bowl with spacious draining board
- Tap ledge across the entire width offers plenty of space
- Functional area with flowing transition to draining board
- Optional functional accessories are available
- High-quality features with drain remote control, covered C-overflow and InFino drain system – elegantly integrated and extremely easy-care
- Flushmount version

Colours



Available colours:

anthracite
coffee
white
black
soft white
volcano grey
rock grey

SILGRANIT volcano grey

Scope of supply

- waste kit with space-saving pipe
- 3 ½'' InFino basket strainer with drain remote control (rotary switch)

Details

Min cabinet size	500 mm

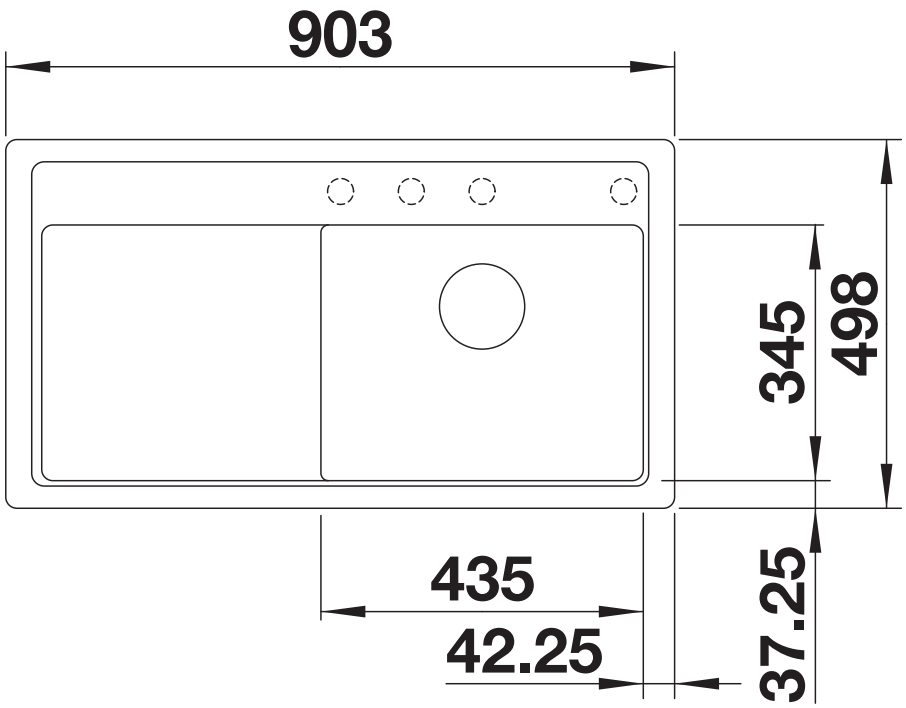

Top view

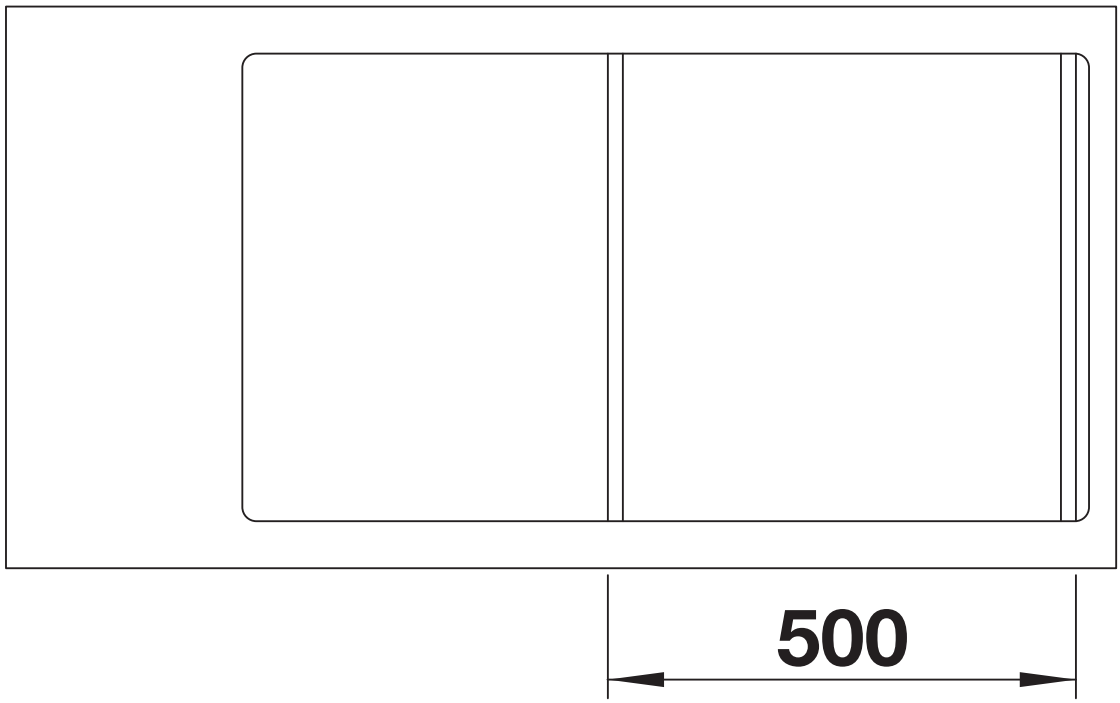

Cut-out

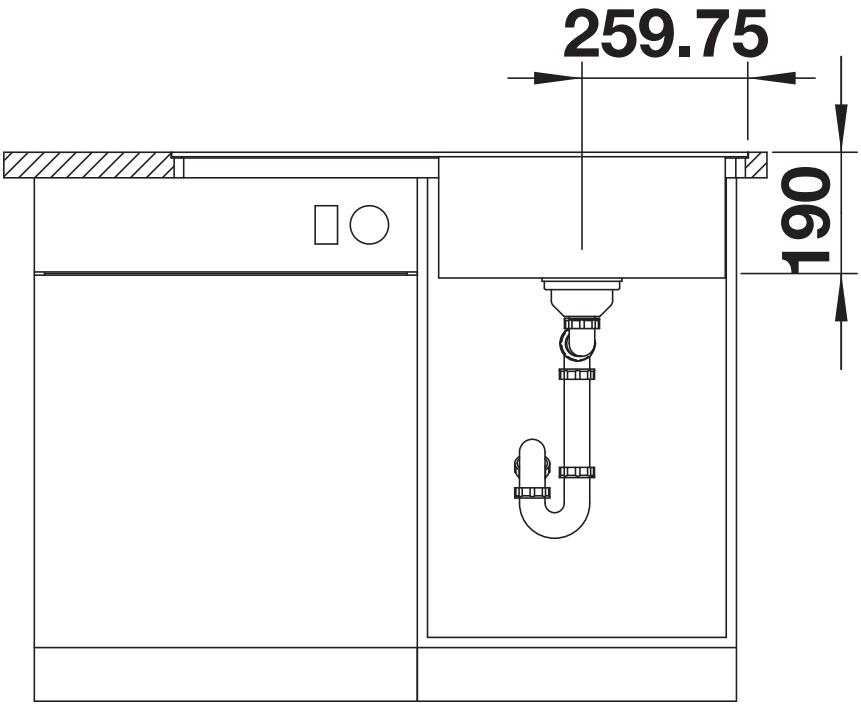

Front view

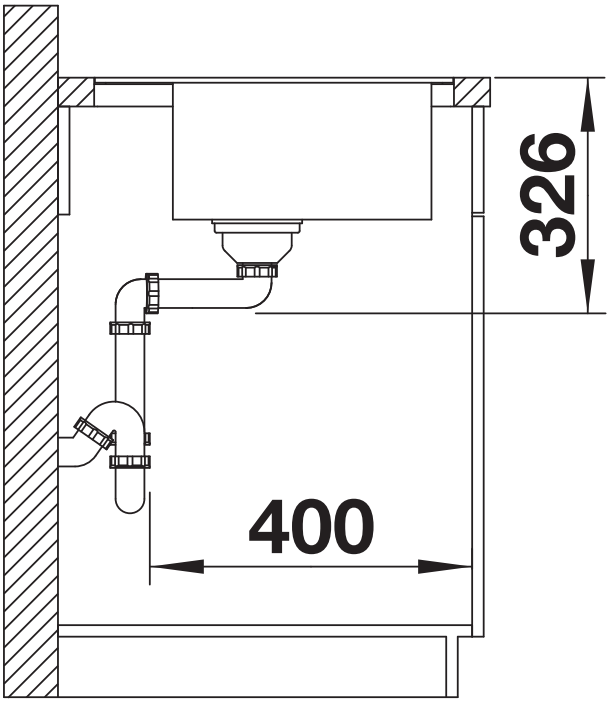

Side view