Product information sheet ZENAR 5 S

Item no. 527365

Benefits



- Particularly large bowl with spacious draining board
- Tap ledge across the entire width offers plenty of space
- Functional area with flowing transition to draining board
- Functional accessories optionally available
- High-quality features with drain remote control, covered C-overflow and InFino drain system – elegantly integrated and easy-care

Colours



Available colours:

anthracite
rock grey
white
tartufo
coffee
black
soft white
volcano grey

SILGRANIT volcano grey

Planning information

- Cut out size: 895 x 490 x R15
- Right hand bowl only

Scope of supply

- waste kit with space-saving pipe
- 3 ½'' InFino basket strainer with drain remote control (rotary switch)

Details

Min cabinet size 500 mm

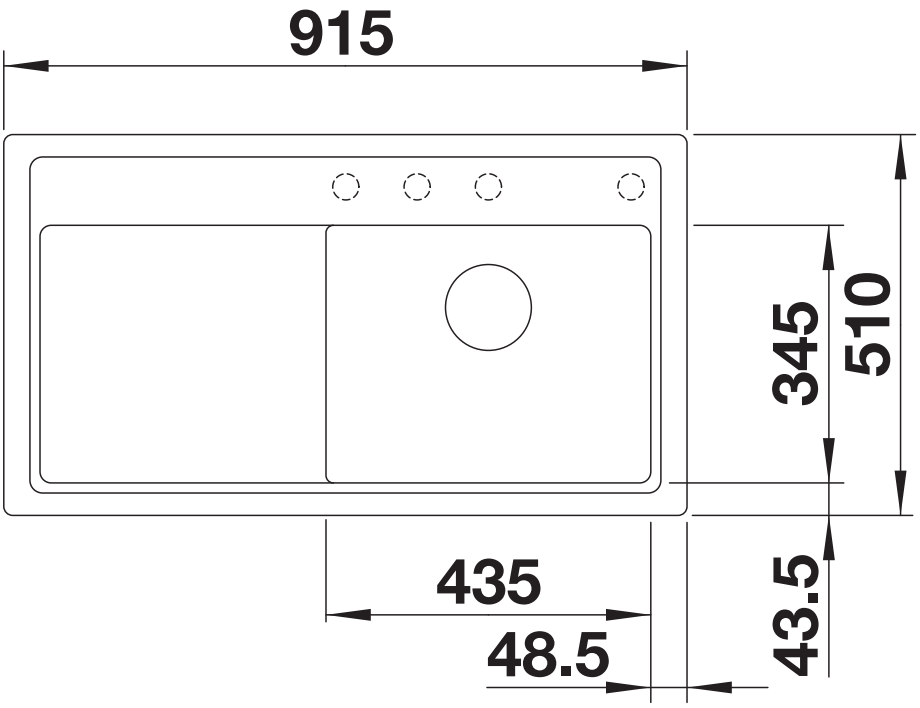

Top view

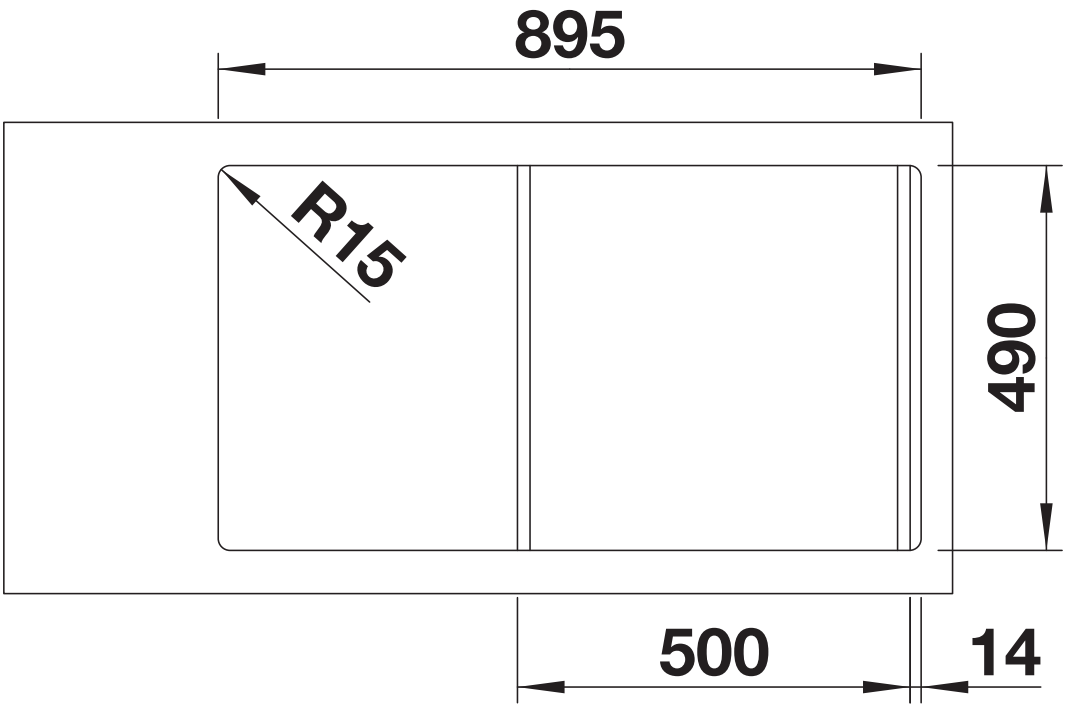

Cut-out

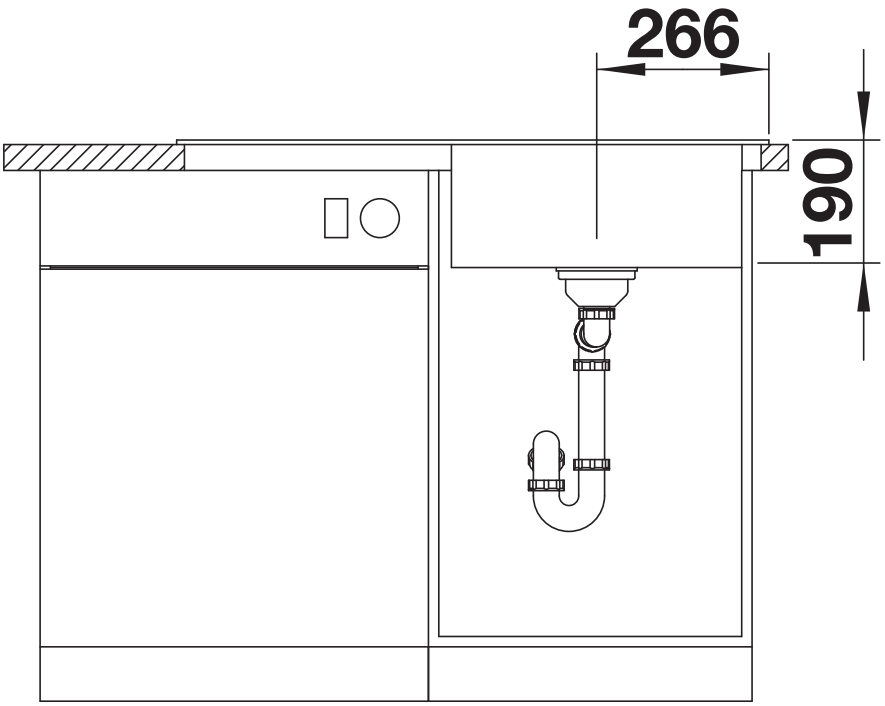

Front view

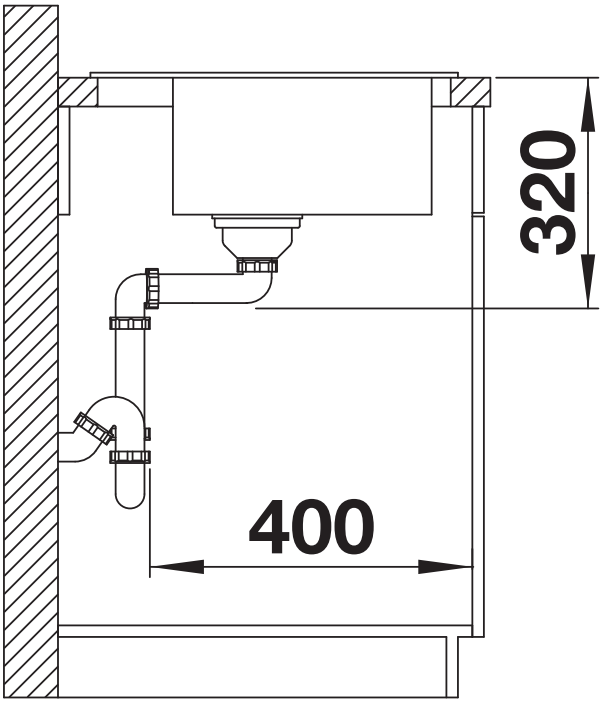

Side view