Product information sheet ZENAR 45 S

Item no. 527361

Benefits



- Particularly large bowl with spacious draining board
- Tap ledge across the entire width offers plenty of space
- Functional area with flowing transition to draining board
- Optional functional accessories are available
- High-quality features with drain remote control, covered C-overflow and InFino drain system – elegantly integrated and easy-care

Colours



Available colours:

black
anthracite
rock grey
white
tartufo
coffee
soft white
volcano grey

SILGRANIT volcano grey

Planning information

- Cut out size: 840 x 490 x R15
- Please state hand of bowl

Scope of supply

- waste kit with space-saving pipe
- 3 ½'' InFino basket strainer with drain remote control (rotary switch)

Details

Min cabinet size 450 mm

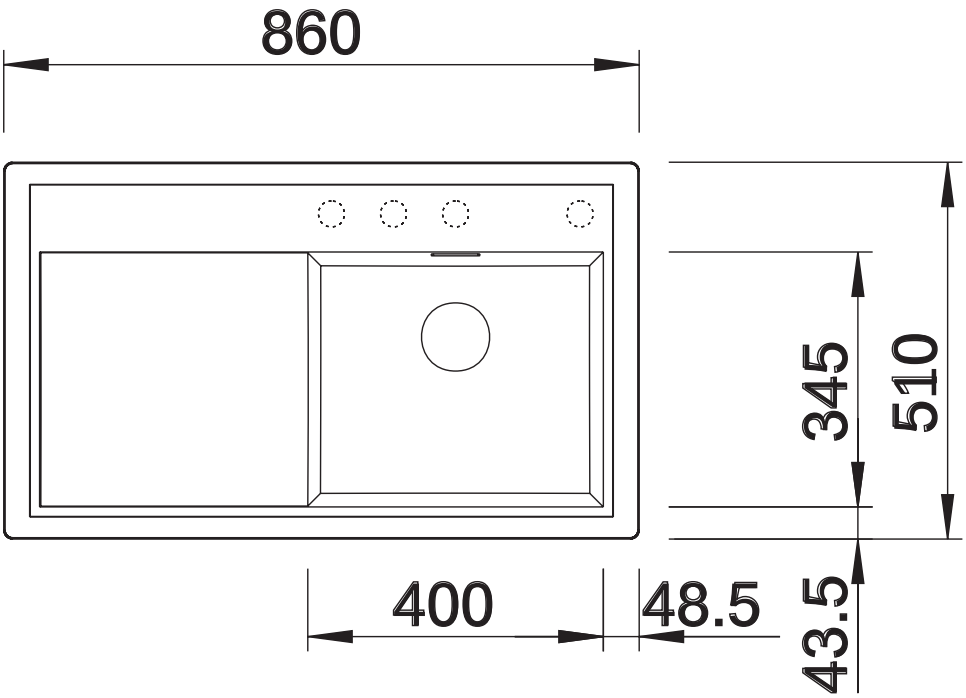

Top view

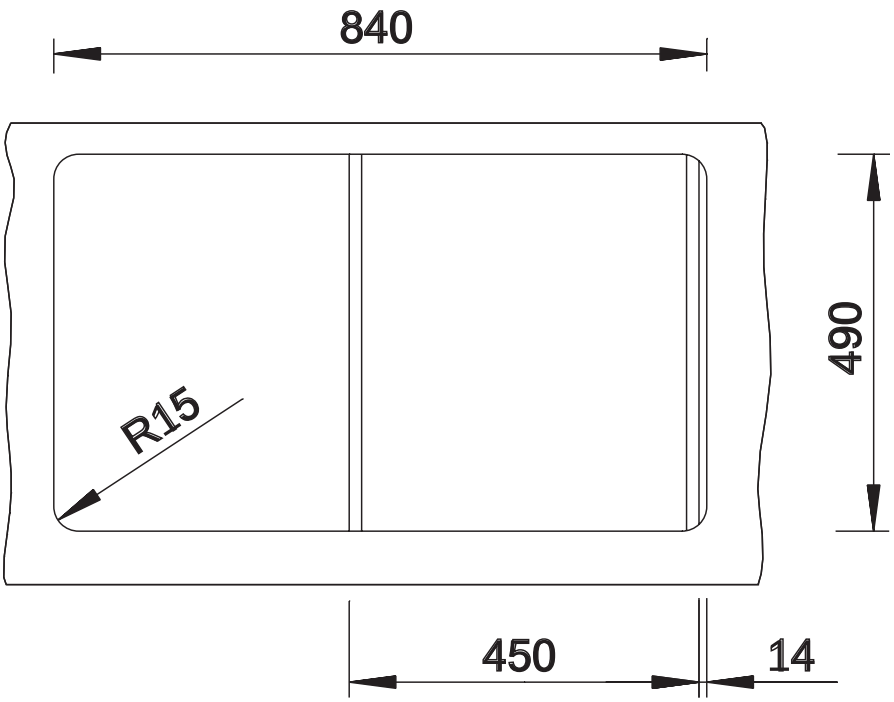

Cut-out

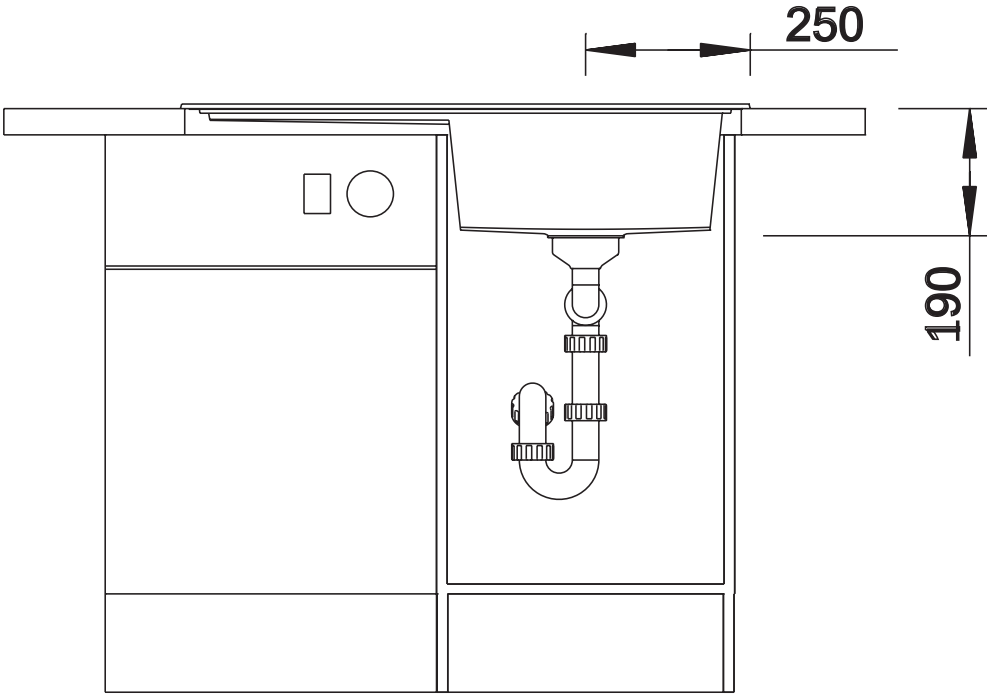

Front view

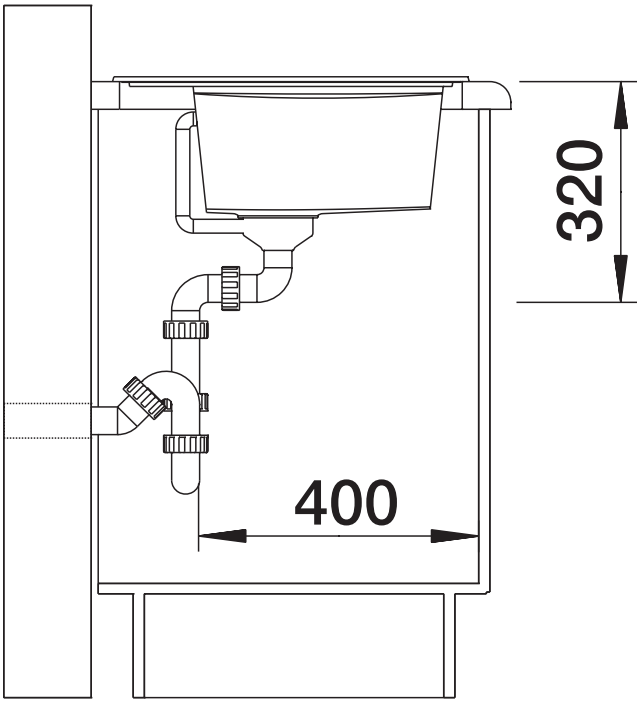

Side view