Product information sheet SUBLINE 350/350-U

Item no. 527347

Benefits



- Undermount bowl for discerning demands on design
- Timelessly elegant, contoured bowl design
- 2 in 1: two bowls, one cut-out panel and only one mounting procedure
- Entire system for a wide variety of plans featuring large and small bowls
- High-quality features with covered C-overflow and InFino drain system – elegantly integrated and easy-care
- Versatile accessories available

Colours



Available colours:

black
anthracite
rock grey
volcano grey
white
soft white
tartufo
coffee

SILGRANIT volcano grey

Planning information

- Cut-out radius: 10 mm

Scope of supply

- waste kit with space-saving pipe
- waste connection
- 2 x 3 ½'' InFino basket strainer
- fixing kit

Details

Min cabinet size 800 mm

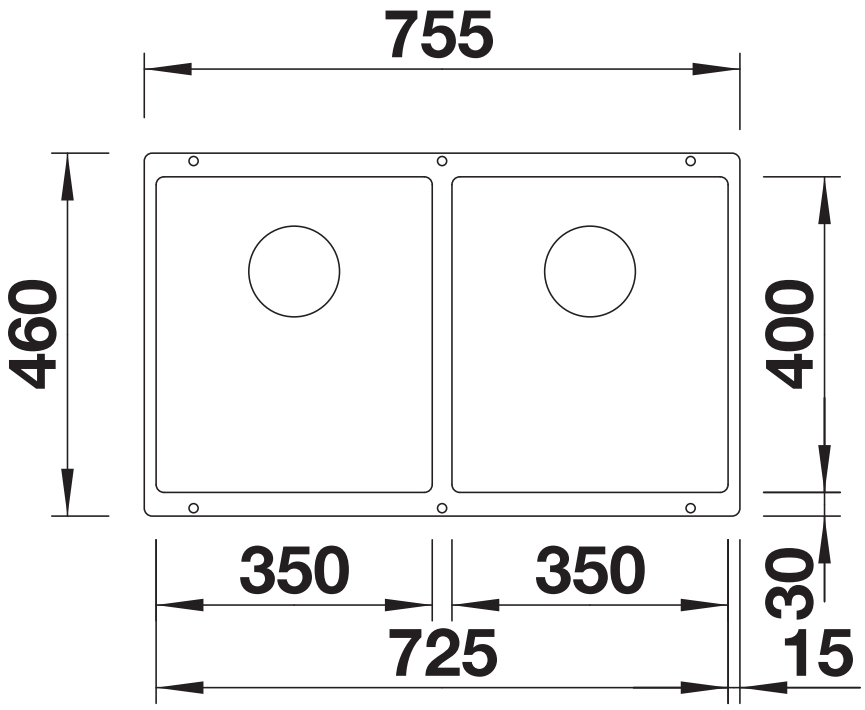

Top view

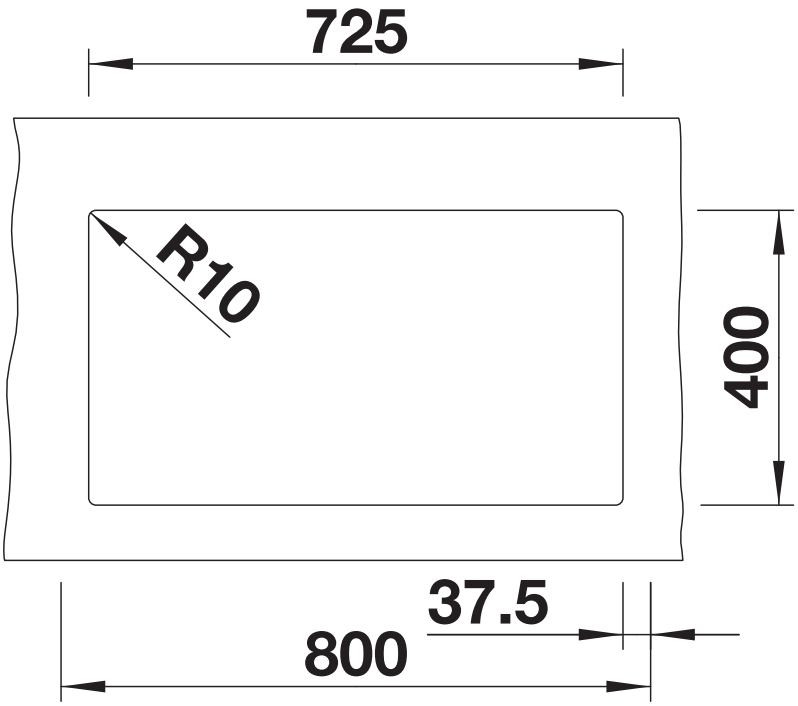

Cut-out

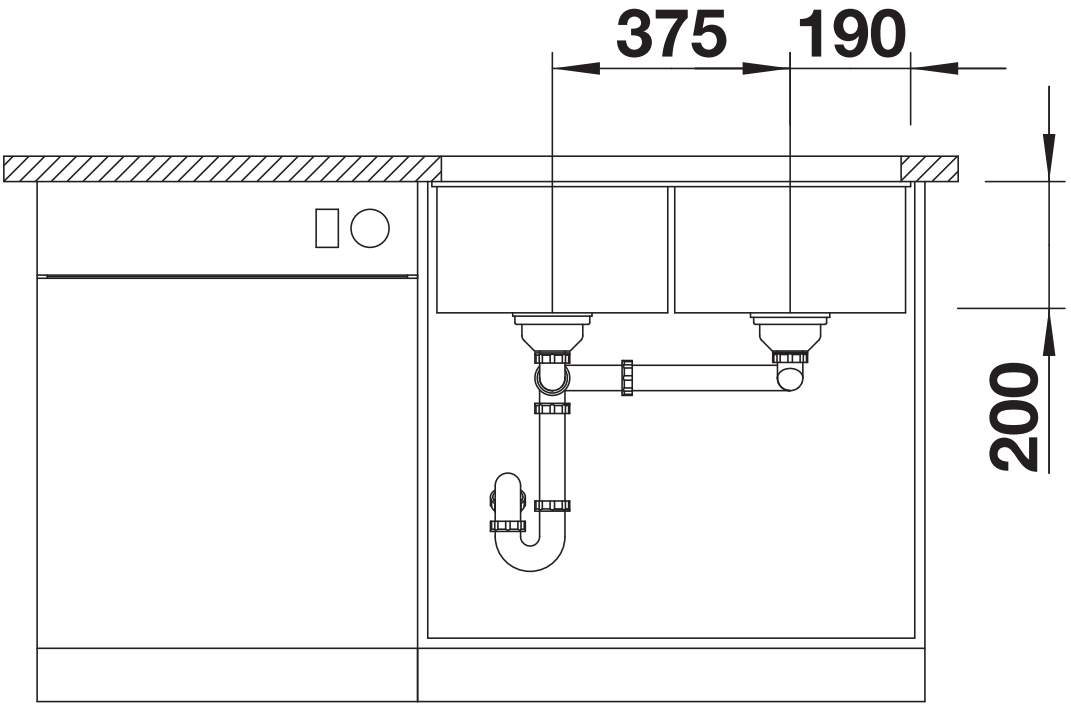

Front view

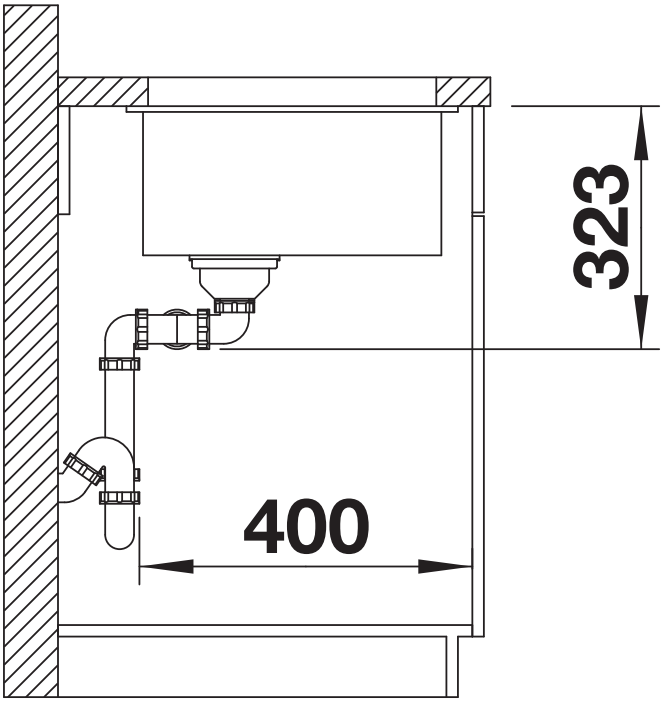

Side view