Product information sheet PLEON 6

Item no. 527320

Benefits



- Timelessly elegant, straight-lined design
- Single bowl with maximum volume thanks to particularly deep bowl
- Continuous, generous tap ledge and low-profile rim
- Easy to clean, flowing transition from the sink's rim to the tap ledge
- High-quality features with the covered C-overflow and InFino drain system – elegantly integrated and easy-care
- Compatible with the BLANCO Multi Match Accessory Set: PLEON bowls can be upgraded with the Multi Match Accessory Bundle and Cutting Board, adding integrated in-sink functionality and extra prep capacity where countertop space is limited

Colours



Available colours:

black
anthracite
rock grey
white
tartufo
coffee
soft white
volcano grey

SILGRANIT volcano grey

Planning information

- The optional ash compound chopping board can only be placed on the edge of the bowl if the diameter of the kitchen mixer tap is less than 48 mm.

Scope of supply

- waste kit with space-saving pipe
- 3 ½'' InFino basket strainer

Details

Min cabinet size 600 mm

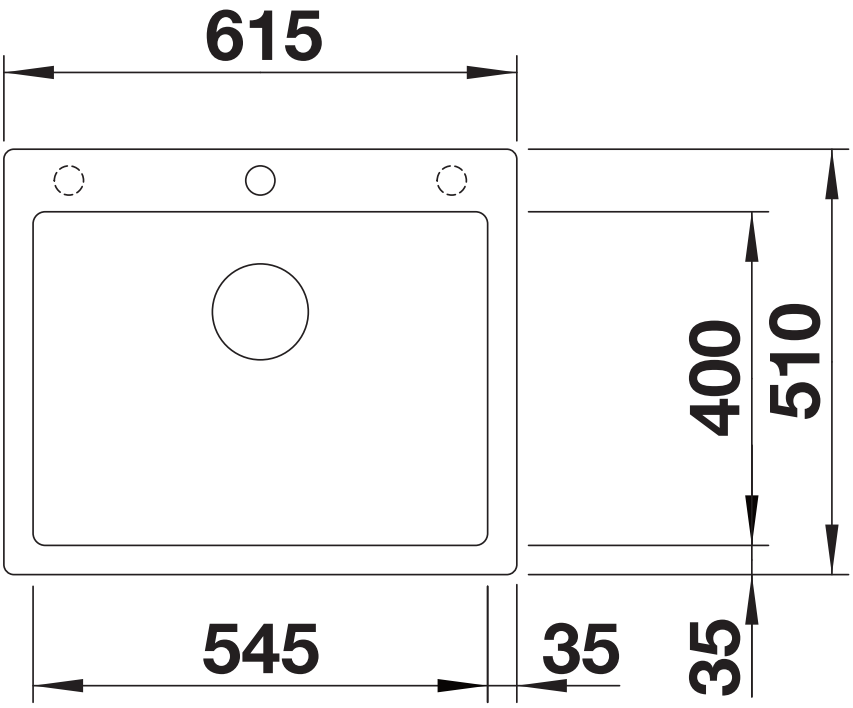

Top view

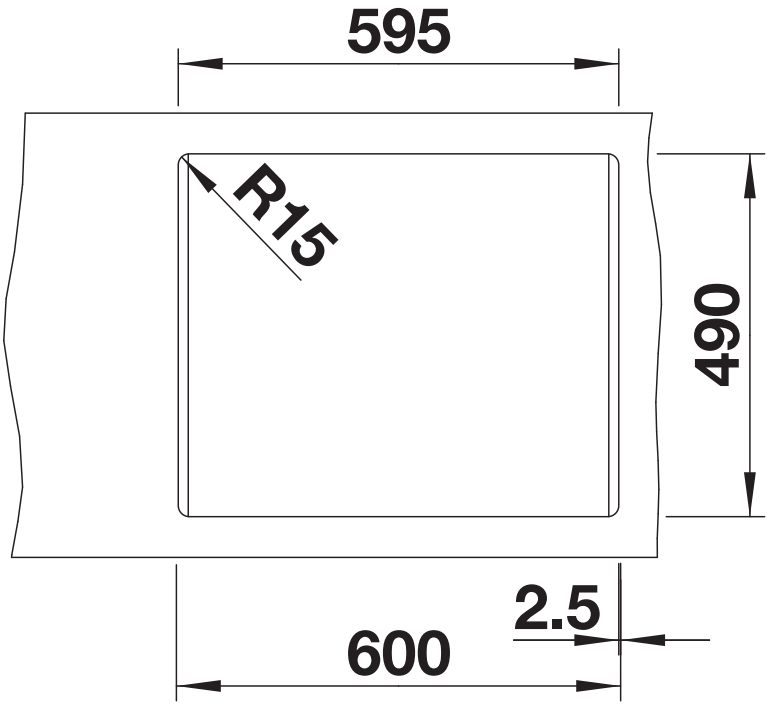

Cut-out

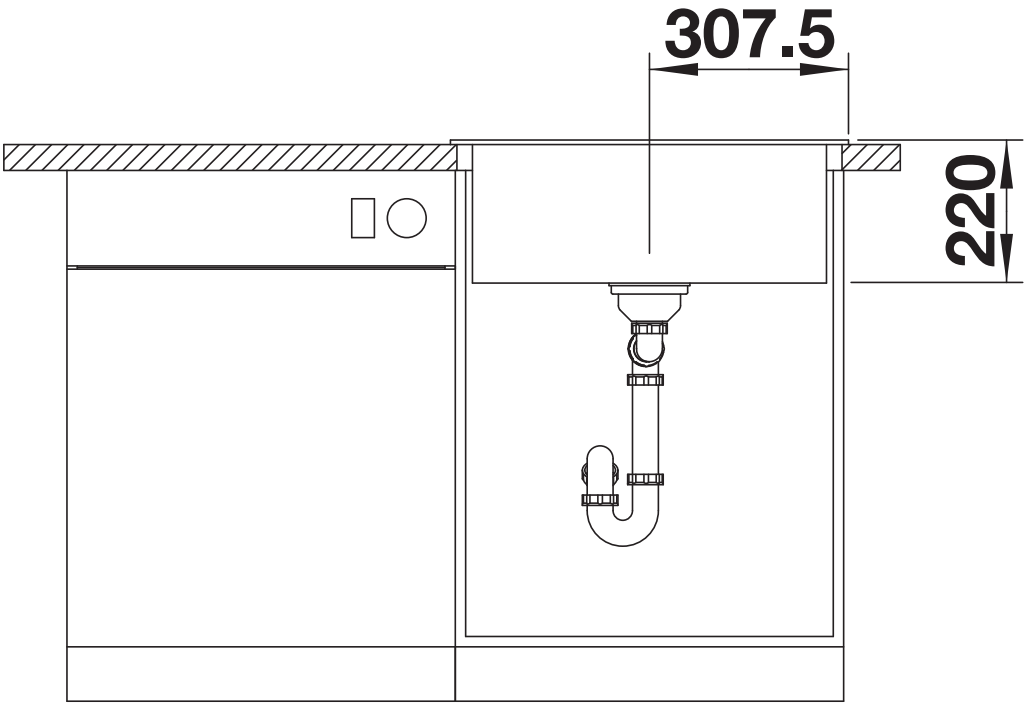

Front view

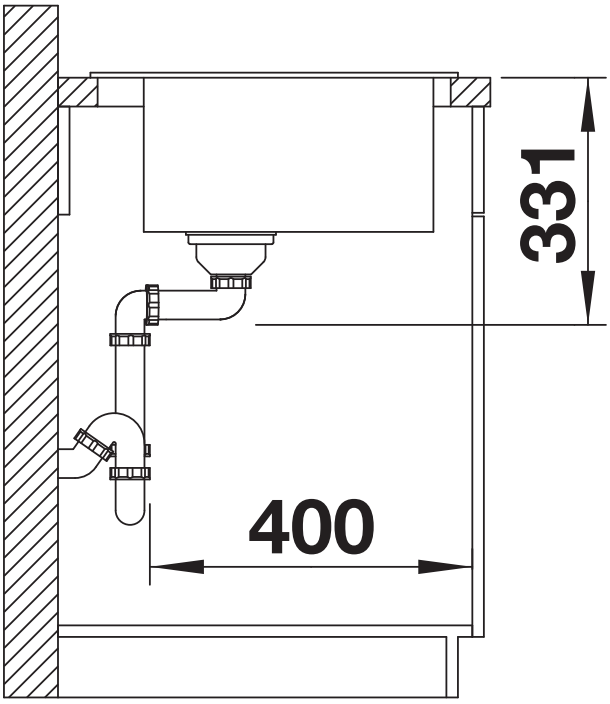

Side view