Product information sheet NAYA 5

Item no. 527310

Benefits



- Generous bowl for multiple works in and around the sink
- Soft internal corners in the bowl for easy cleaning
- Mindful shape that integrates nicely within the kitchen design
- Continuous ledge frames the water area and protects the worktop from water splashes
- Compatible with the BLANCO Multi Match Accessory Set: NAYA bowls can be upgraded with the Multi Match Accessory Bundle and Cutting Board, adding integrated in-sink functionality and extra prep capacity where countertop space is limited

Colours



Available colours:

anthracite
white
black
rock grey
tartufo
coffee
soft white
volcano grey

SILGRANIT volcano grey

Scope of supply

- waste kit with space-saving pipe
- 3 ½'' basket strainer

Details

Min cabinet size	500 mm

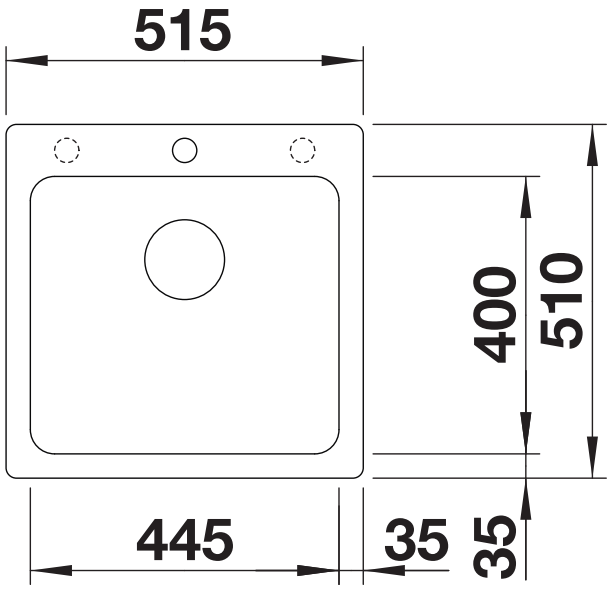

Top view

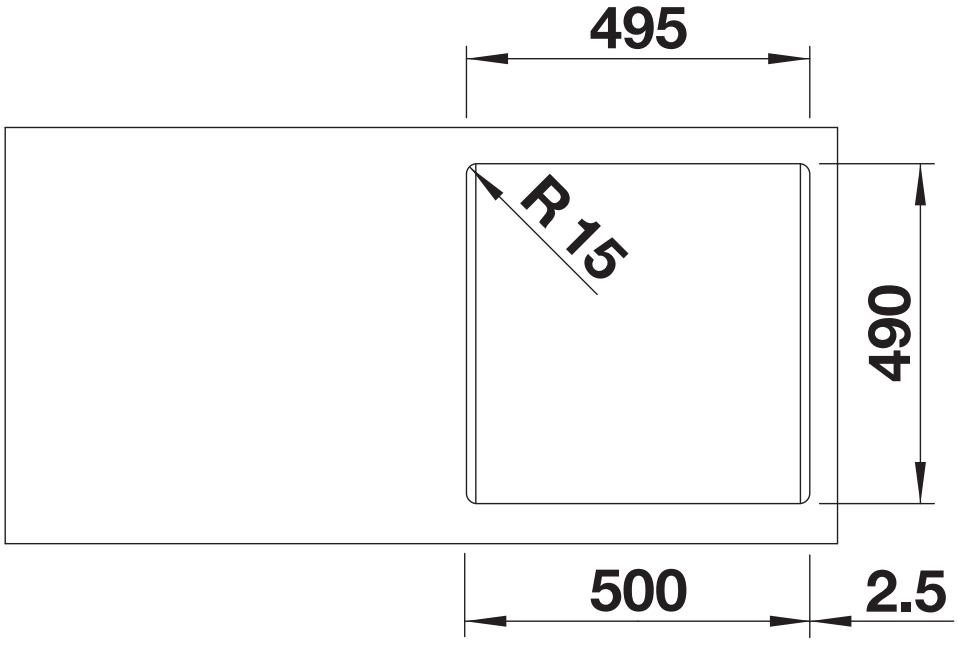

Cut-out

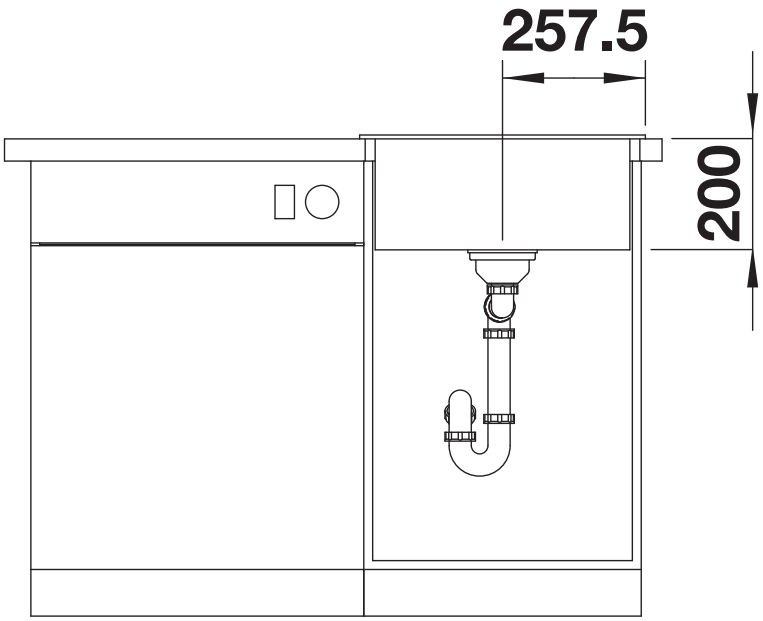

Front view

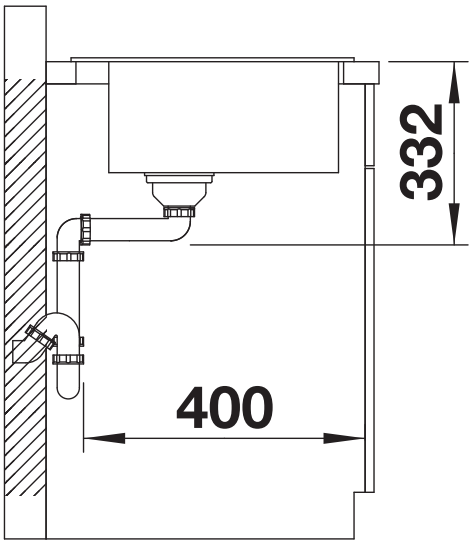

Side view