Product information sheet METRA 6 S

Item no. 527299

Benefits



- Young, straight-lined design
- The large capacity of the main bowl provides generous room to do the washing up
- The additional bowl and the spacious draining area provide a high degree of comfort
- Can be installed reversibly

Colours



Available colours:

black
anthracite
rock grey
volcano grey
white
soft white
tartufo
coffee

SILGRANIT volcano grey

Planning information

- Cut out size: 980 x 480 x R15
- Universal handing

Scope of supply

- mulifunctional stainless steel colander
- waste kit with space-saving pipe
- 2 x 3 ½'' basket strainer with drain remote control (rotary switch) for the main bowl

Details

Min cabinet size 600 mm

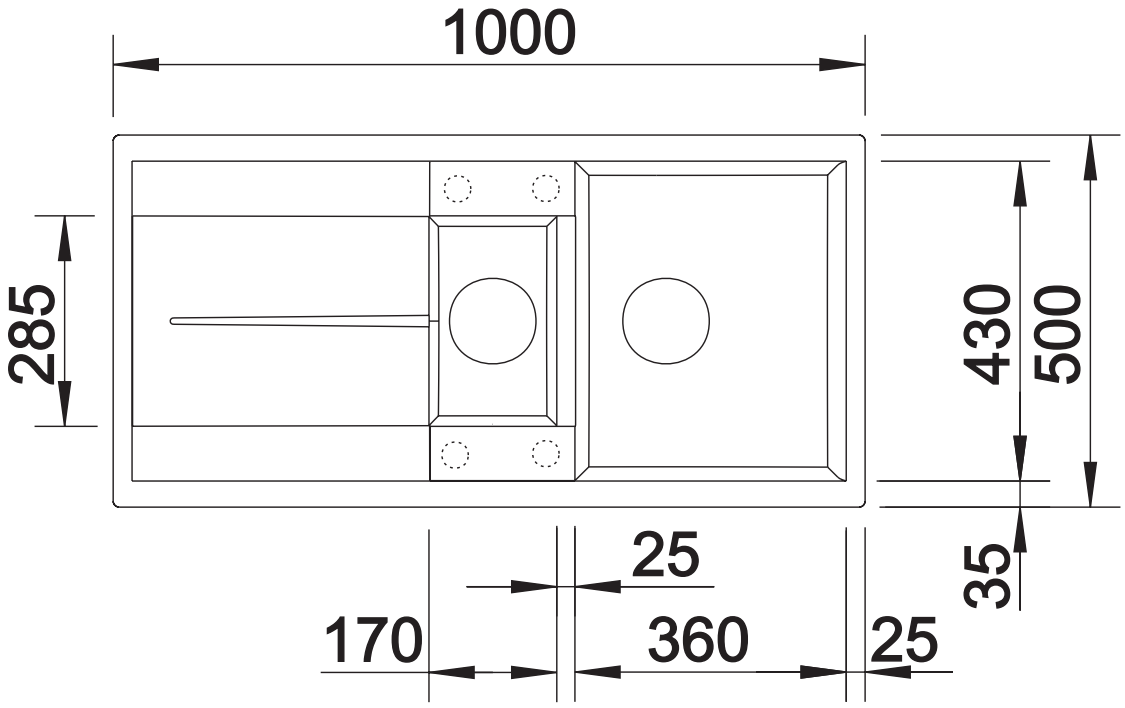

Top view

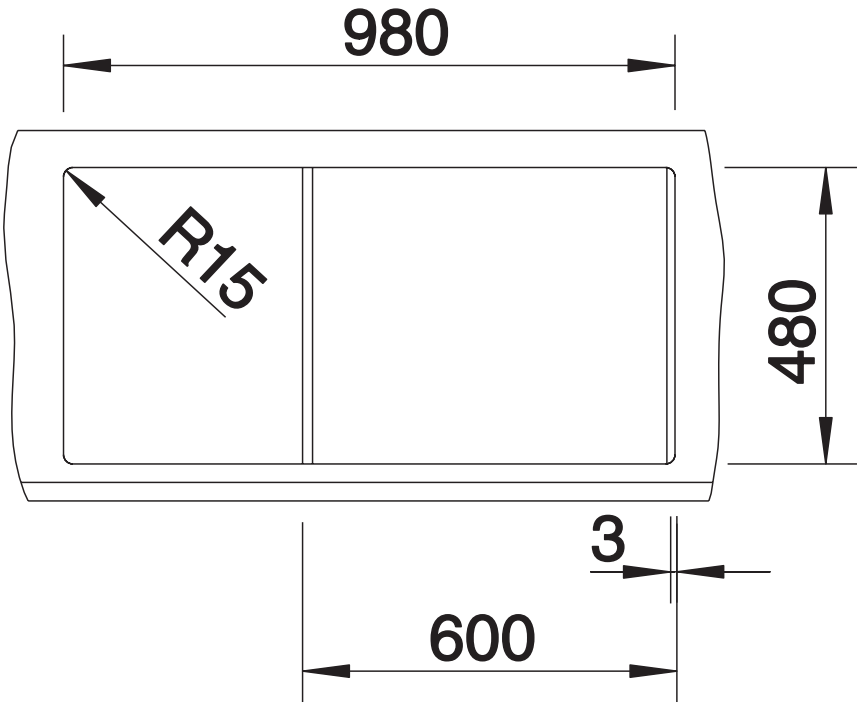

Cut-out

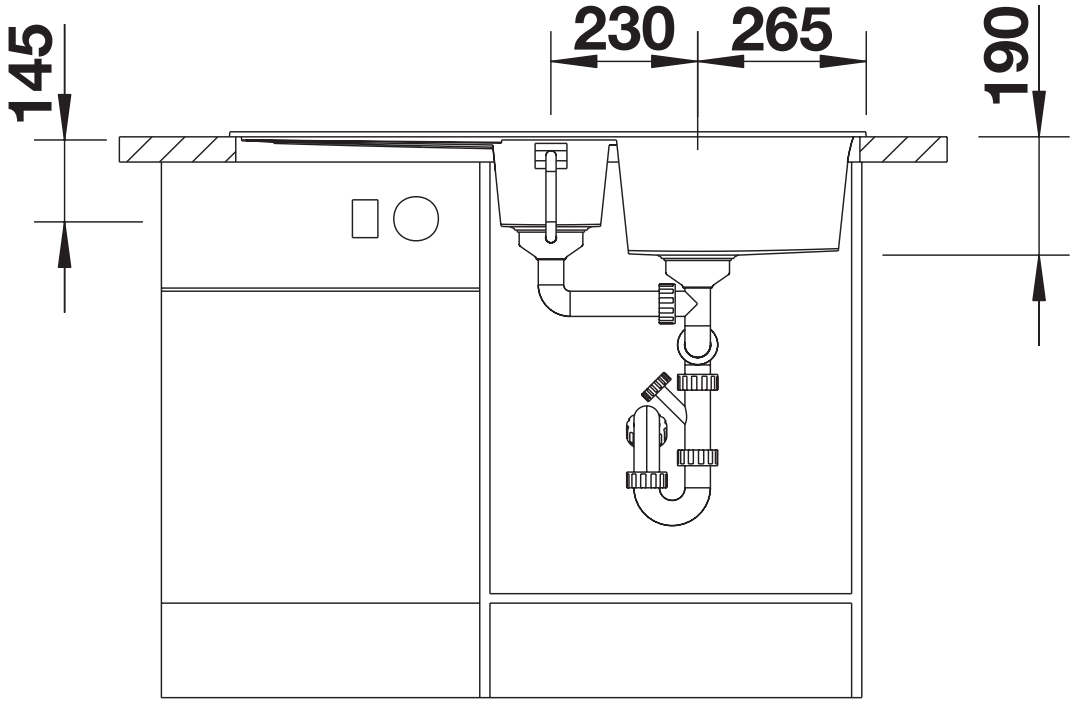

Front view

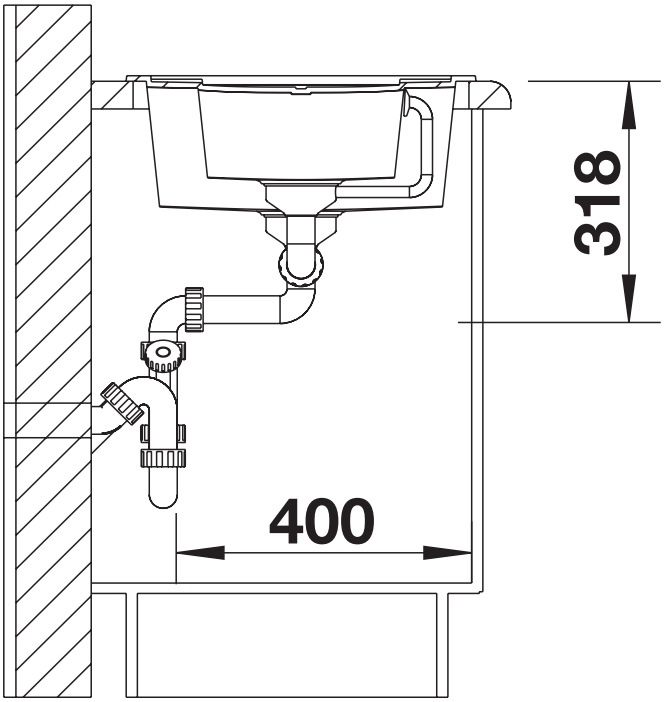

Side view