Product information sheet ETAGON 500-U

Item no. 527258

Benefits

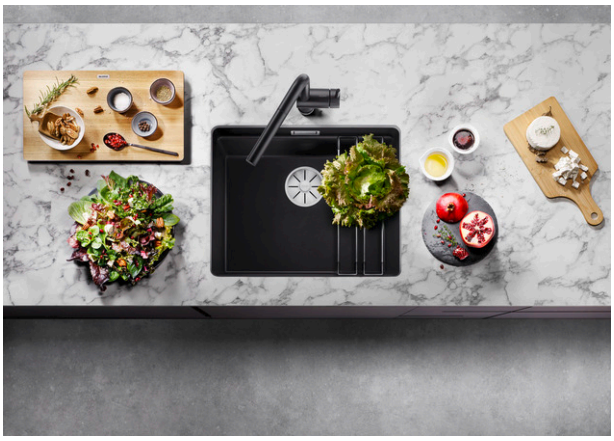

- Generous staggered bowl with added functionality
- Integrated step creates an additional functional level
- Clever system concept with versatile ETAGON rails
- High-quality features with the covered C-overflow and InFino drain system – elegantly integrated and easy-care
- For undermount installation, ideal in combination with high-quality worktops

Colours

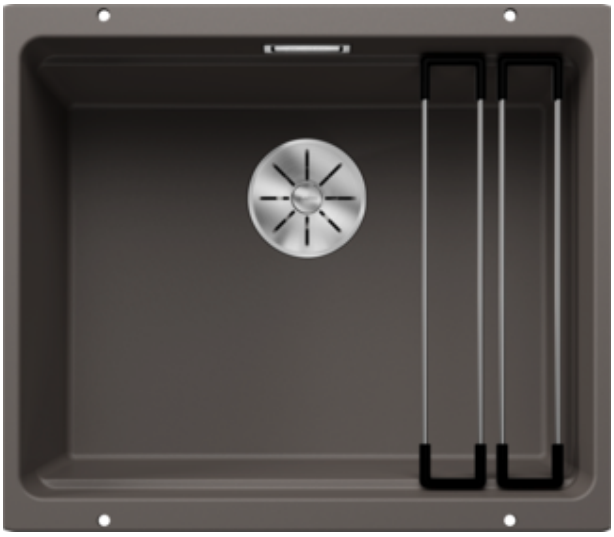

Available colours:

black
anthracite
rock grey
volcano grey
white
soft white
tartufo
coffee

SILGRANIT volcano grey

Planning information

- Cut-out radius: 20 mm

Scope of supply

- 2 x ETAGON rails in stainless steel
- waste kit with space-saving pipe
- 3 ½'' InFino basket strainer
- fixing kit

Details

Min cabinet size	600 mm

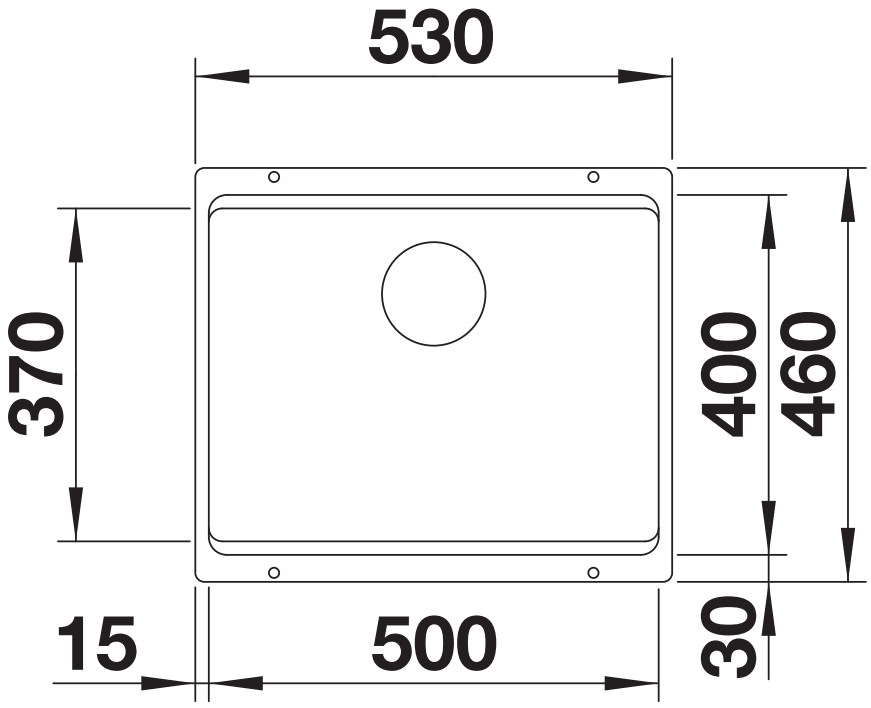

Top view

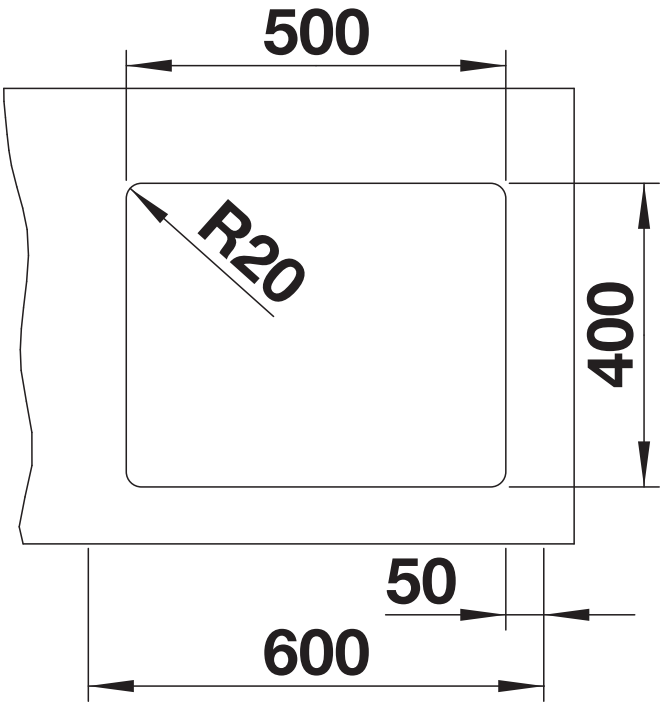

Cut-out

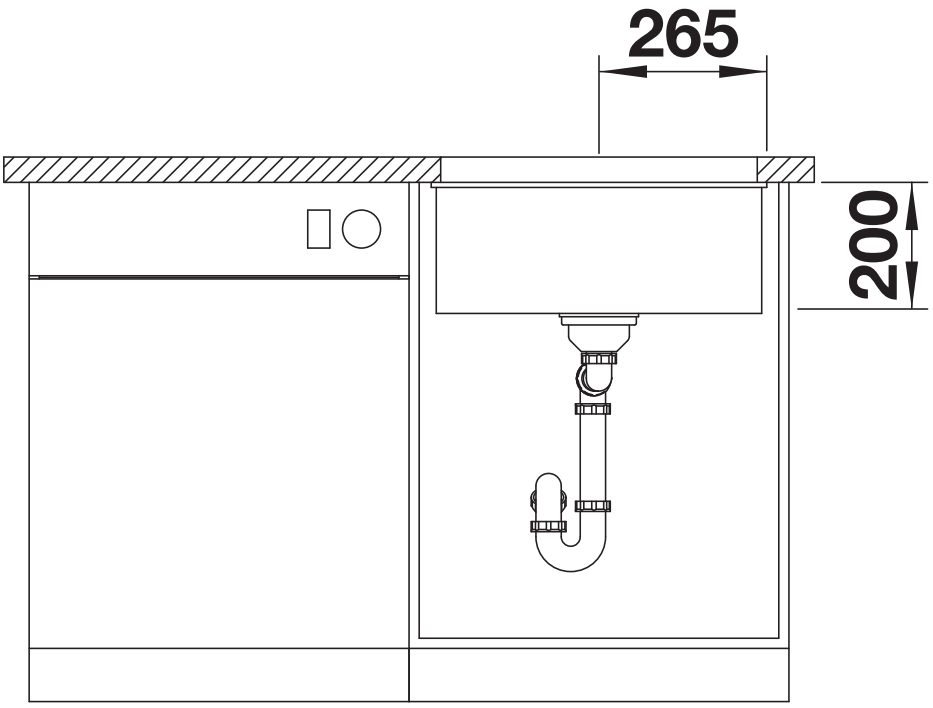

Front view

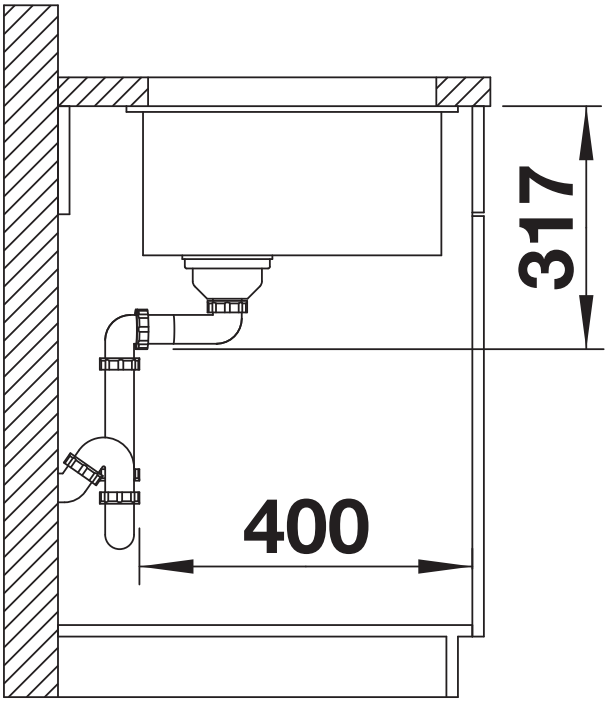

Side view