Product information sheet ELON XL 8 S

Item no. 527255

Benefits



- Compact single-bowl sink
- Practical, comfortable XL bowl
- Clever extendable drainer thanks to the movable stainless steel grid
- Modern undulating design of sink and accessories match each other
- Multifunctional stainless steel drainer grid included in the delivery
- High-quality features with InFino drain system - elegantly integrated and easy-care
- Tap ledge on side, also convenient for window installation
- Can be installed reversibly

Colours



Available colours:

anthracite
rock grey
white
tartufo
coffee
black
soft white
volcano grey

SILGRANIT volcano grey

Scope of supply

- stainless steel drainer grid
- waste kit with space-saving pipe
- 3 ½'' InFino basket strainer

Details

Min cabinet size 800 mm

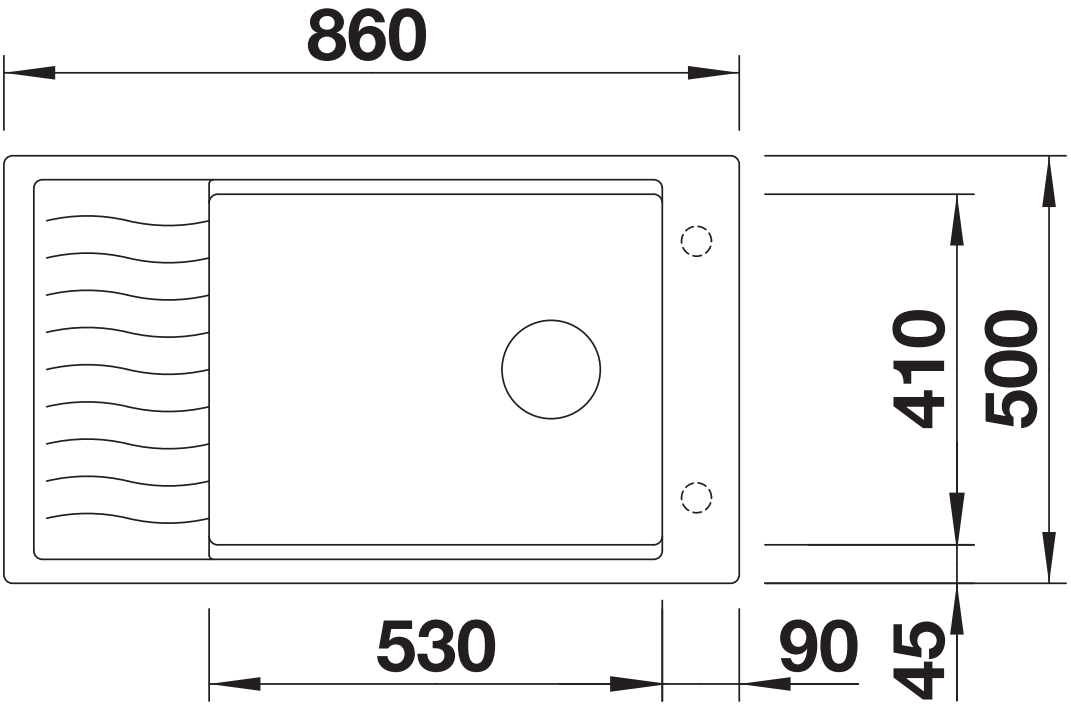

Top view

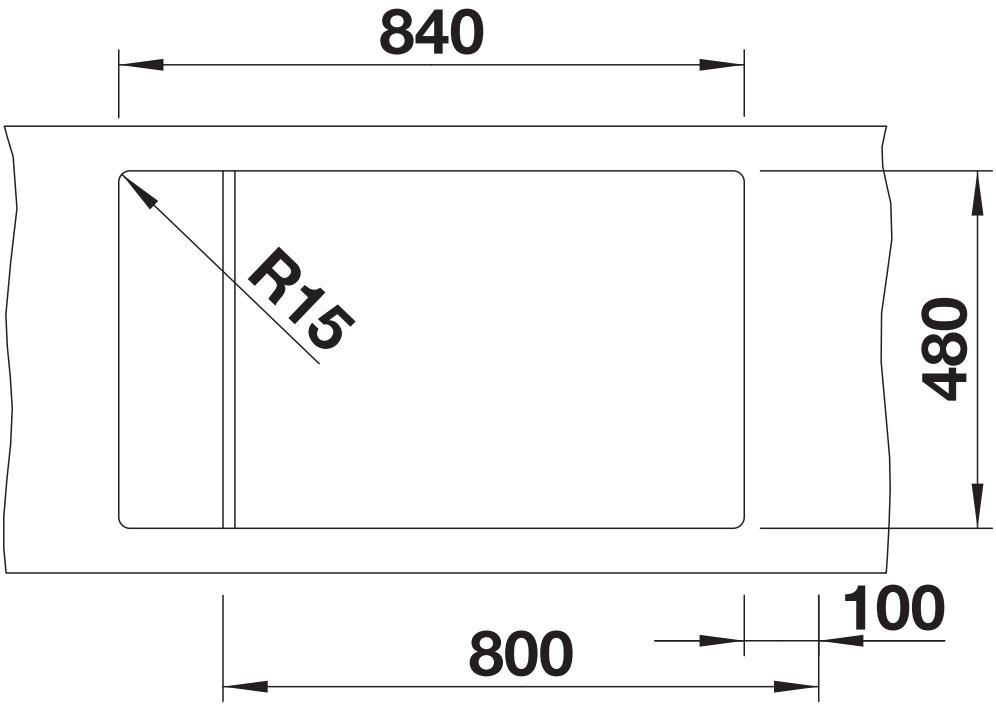

Cut-out

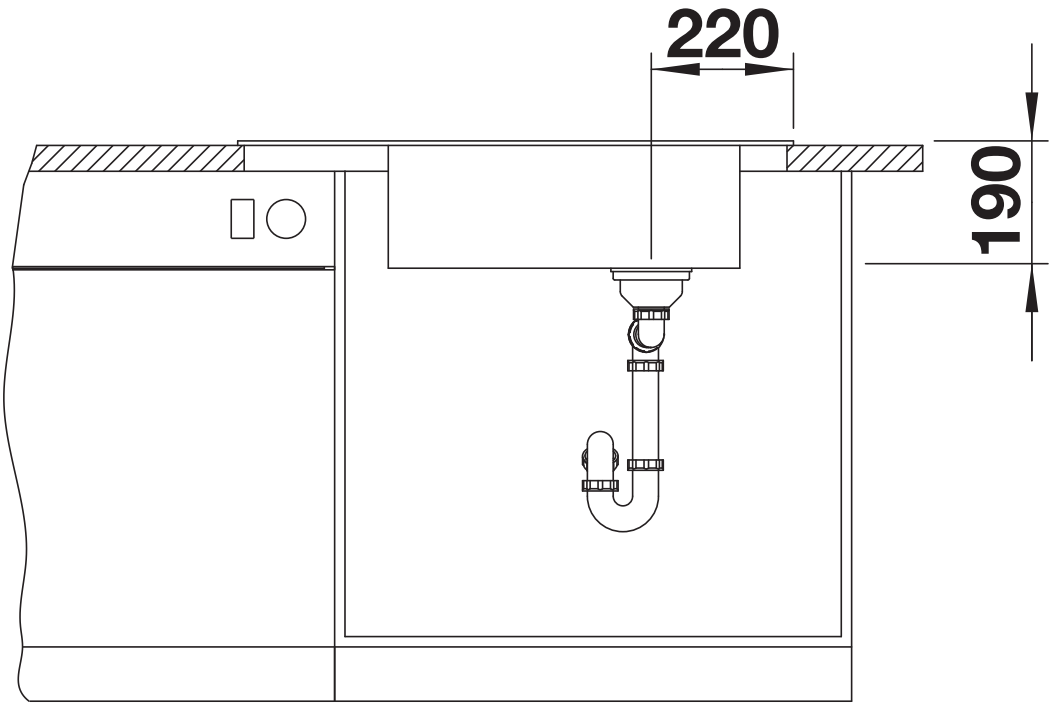

Front view

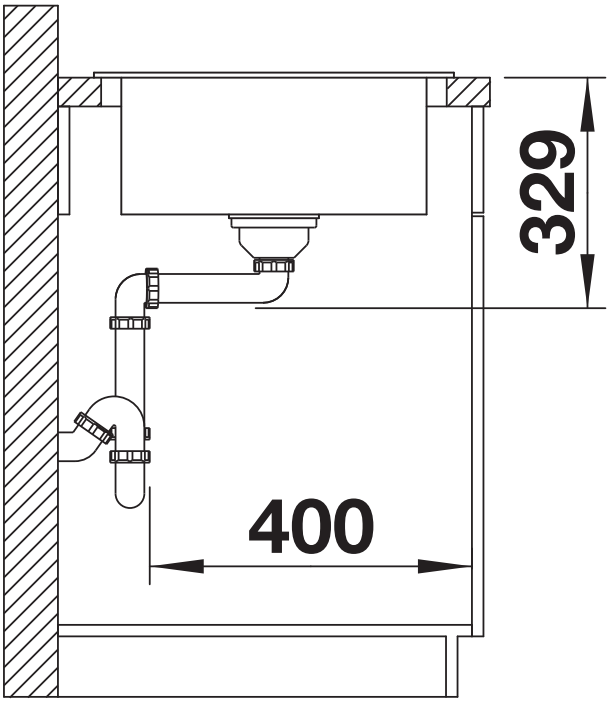

Side view