# Product information sheet ELON 45 S

Item no. 527250

## Benefits



- Compact single-bowl sink for small kitchens
- Large bowl size for 45 cm cabinet
- Clever extendable drainer thanks to the movable stainless steel grid
- Modern undulating design of sink and accessories match each other
- Multifunctional stainless steel drainer grid included in the delivery
- High-quality features with InFino drain system - elegantly integrated and easy-care
- Tap ledge on side, also convenient for window installation
- Can be installed reversibly

## Colours



Available colours:

black
anthracite
rock grey
volcano grey
white
soft white
tartufo
coffee

SILGRANIT volcano grey

## Planning information

- Cut out: 630 x 480 x R15, Universal handing

## Scope of supply

- stainless steel drainer grid
- waste kit with space-saving pipe
- 3 ½'' InFino basket strainer

## Details

| | |
|---|---|
| Min cabinet size | 450 mm |

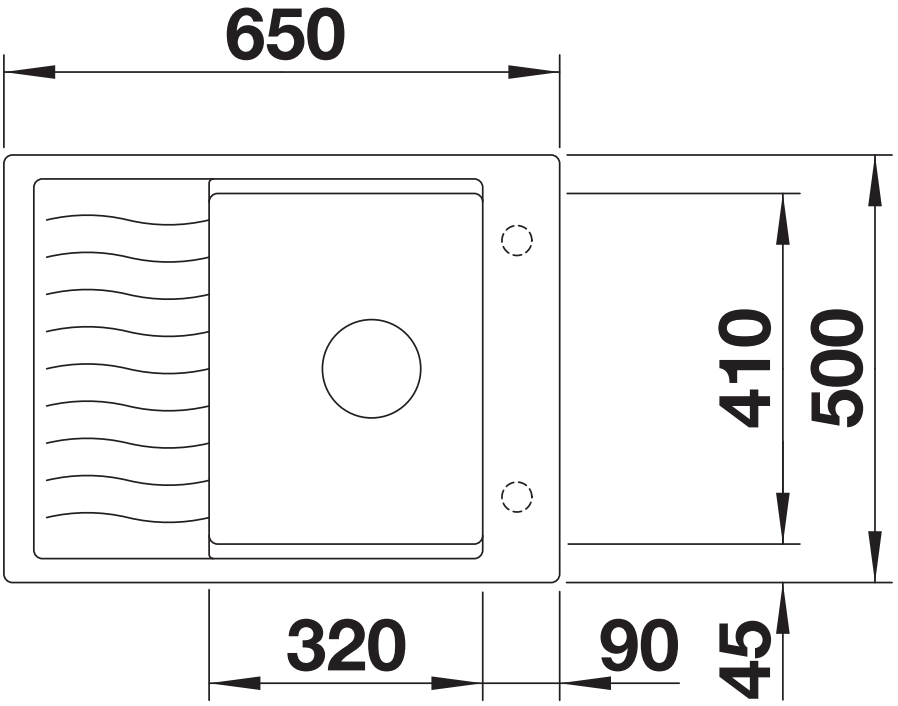


Top view

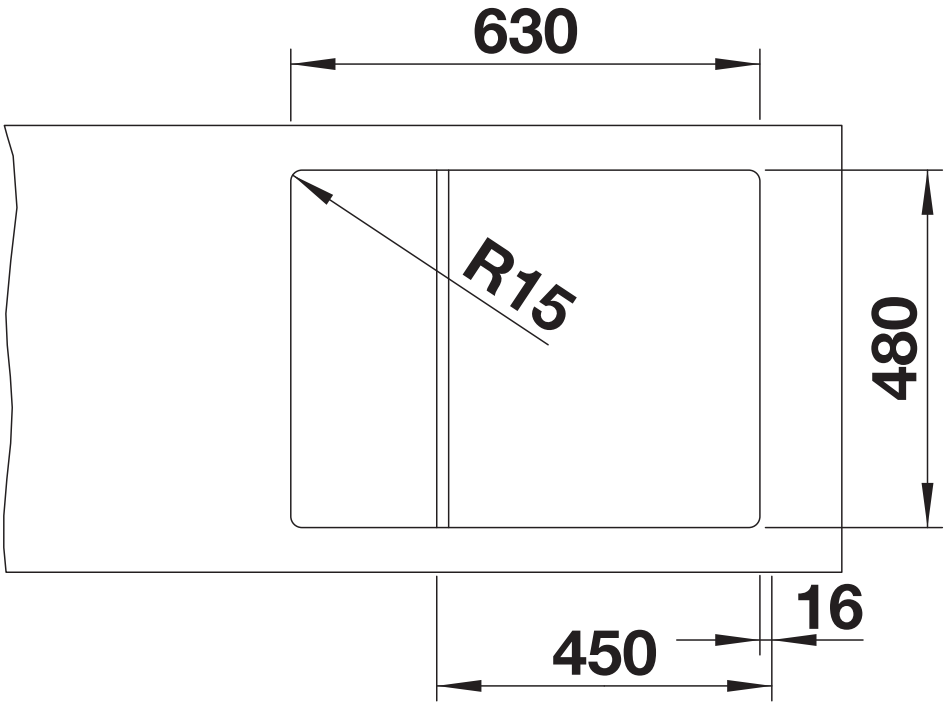


Cut-out

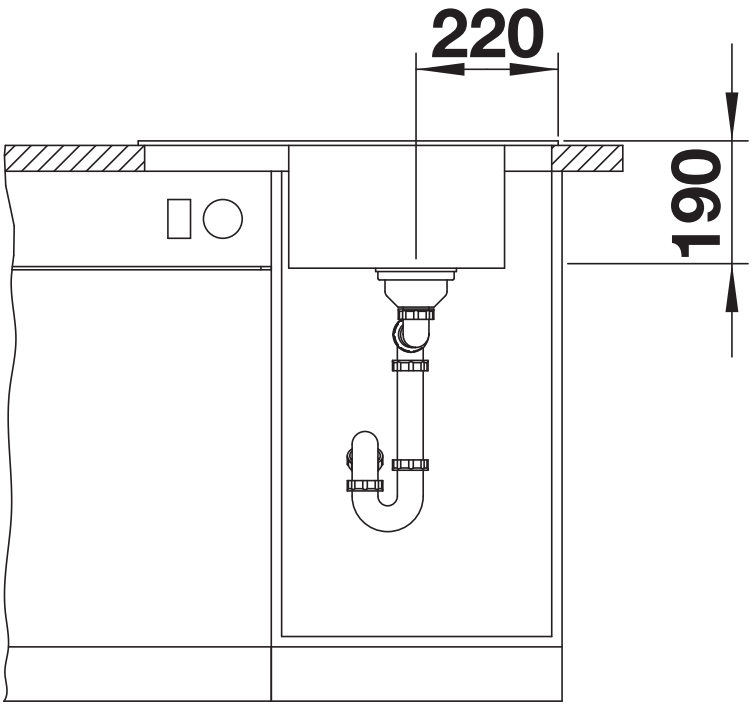


Front view

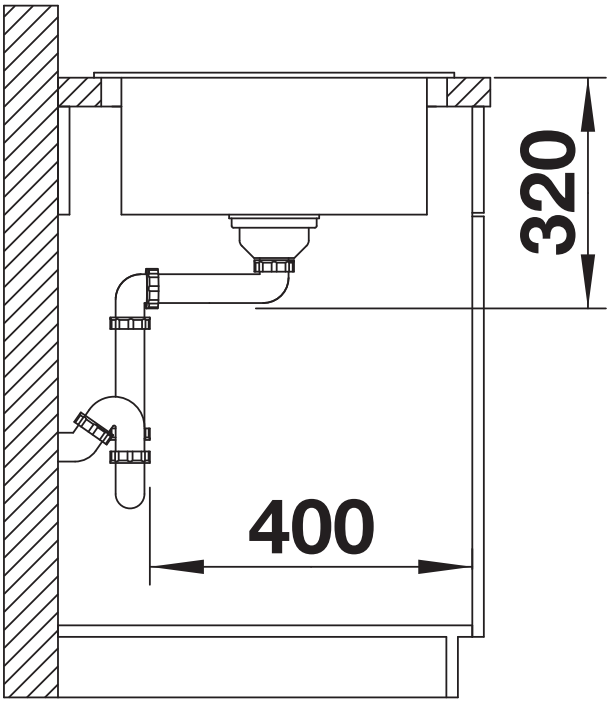


Side view