Product information sheet ZIA XL 6 S

Item no. 527217

Benefits



- Modern design with clear lines
- Straight-lined outer contour emphasised by the narrow rim
- Characteristic tap ledge as a frame that enlarges the drainer
- XL bowl for even more space when washing your dishes
- Classic bowl arrangement for reversible installation

Colours



Available colours:

black
anthracite
volcano grey
white
soft white
coffee

SILGRANIT soft white

Planning information

- Cut out size: 980 x 480 x R15, Universal handing

Scope of supply

- waste kit with space-saving pipe
- 3 ½'' basket strainer

Details

Min cabinet size 600 mm

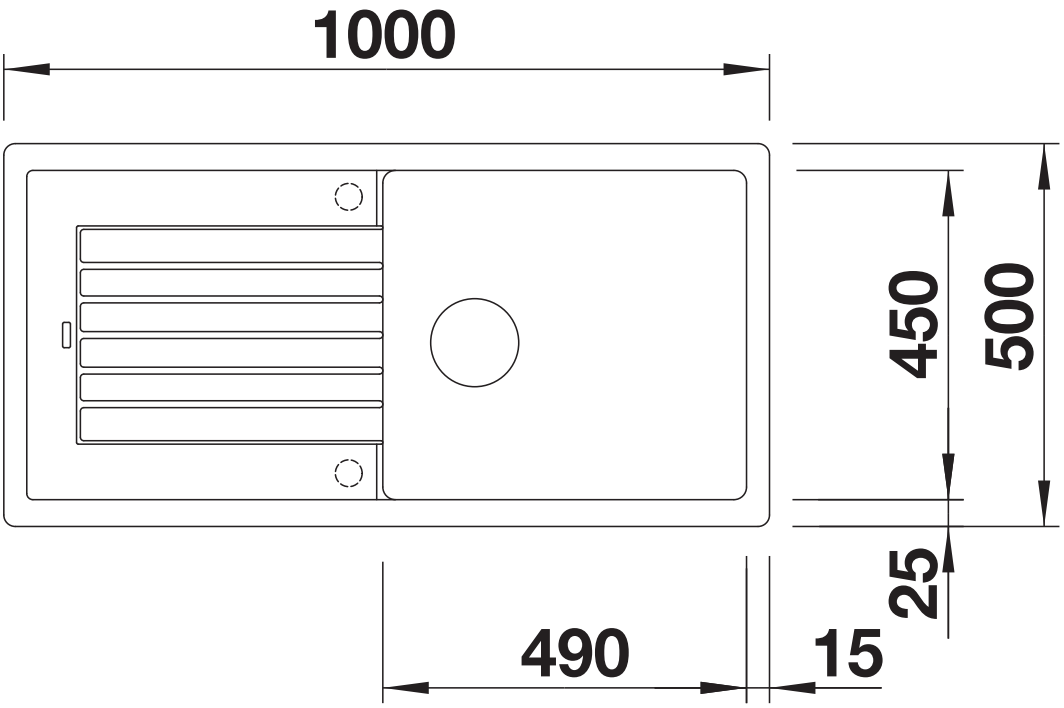

Top view

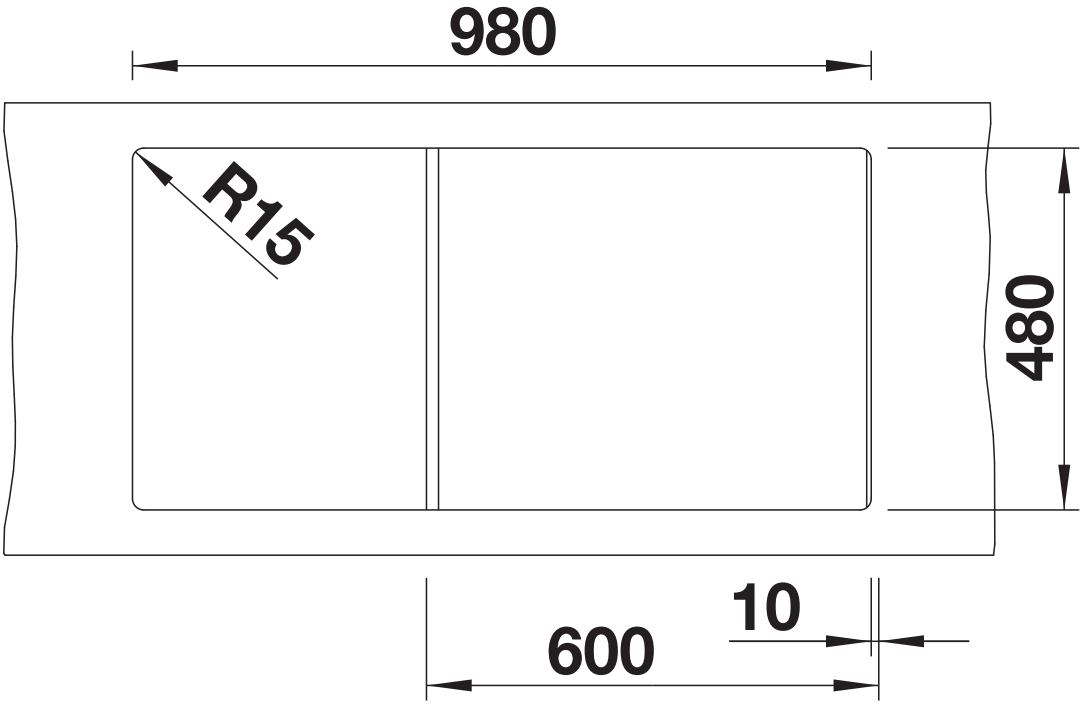

Cut-out

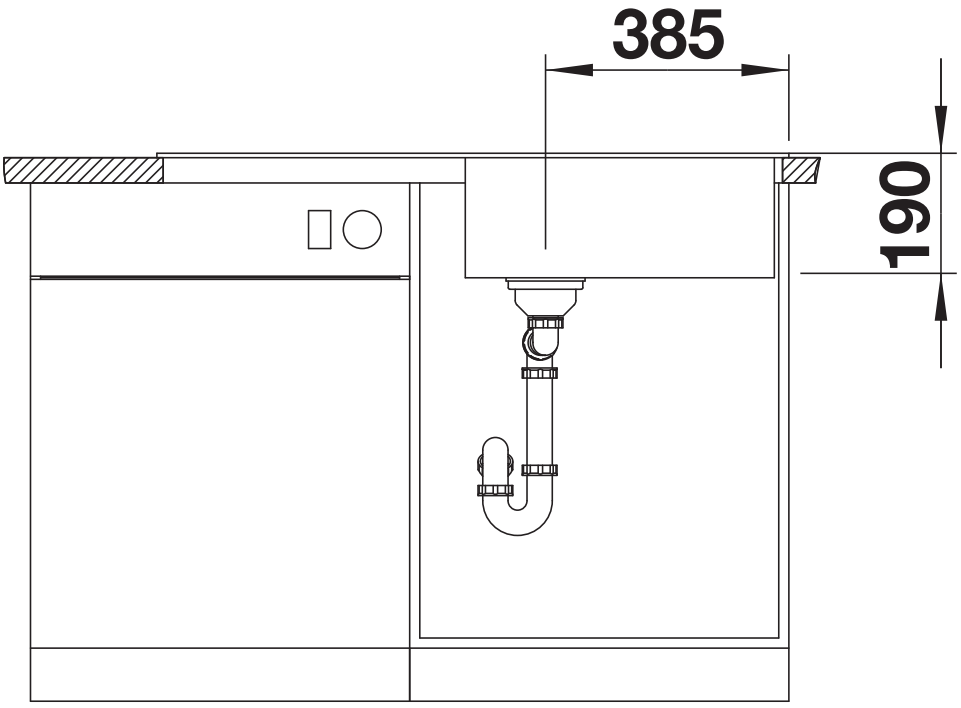

Front view

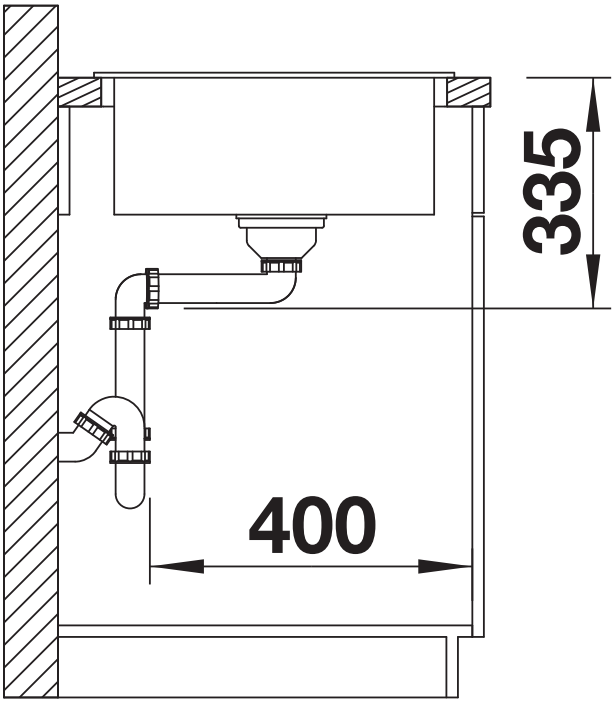

Side view