Product information sheet SUBLINE 700-U Level

Item no. 527171

Benefits



- Undermount bowl for discerning demands on design
- Timelessly elegant, contoured bowl design
- Entire system for a wide variety of plans featuring large and small bowls
- High-quality features with covered C-overflow and InFino drain system – elegantly integrated and easy-care
- Optional versatile accessories are available

Colours



Available colours:

anthracite
rock grey
white
tartufo
coffee
black
soft white
volcano grey

SILGRANIT soft white

Planning information

- Cut-out radius: 10 mm

Scope of supply

- multi-functional stainless steel basket
- waste kit with space-saving pipe
- 3 ½'' InFino basket strainer
- fixing kit

Details

Min cabinet size 800 mm

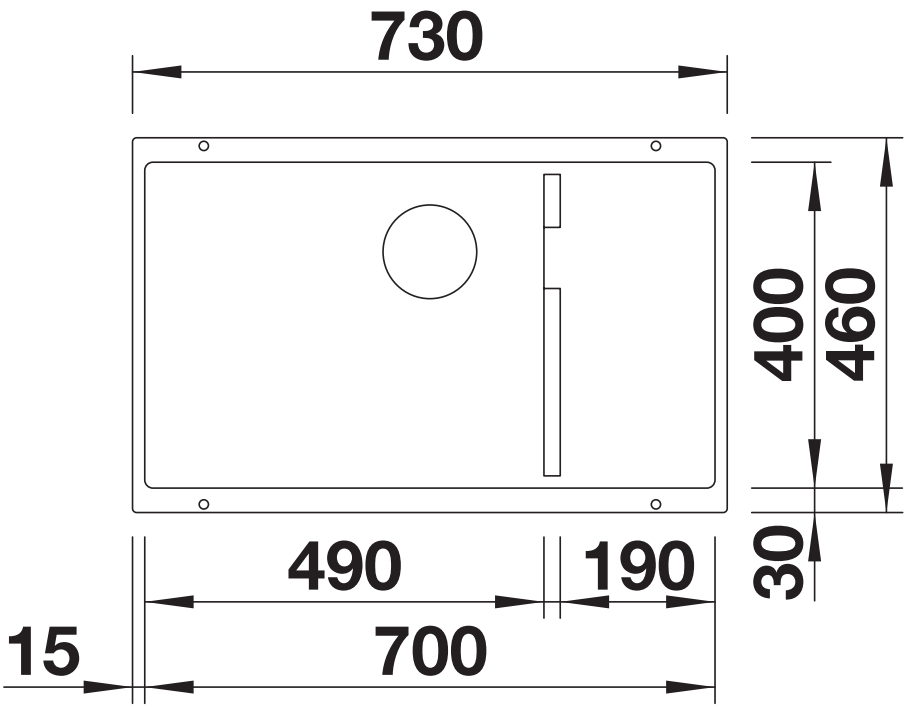

Top view

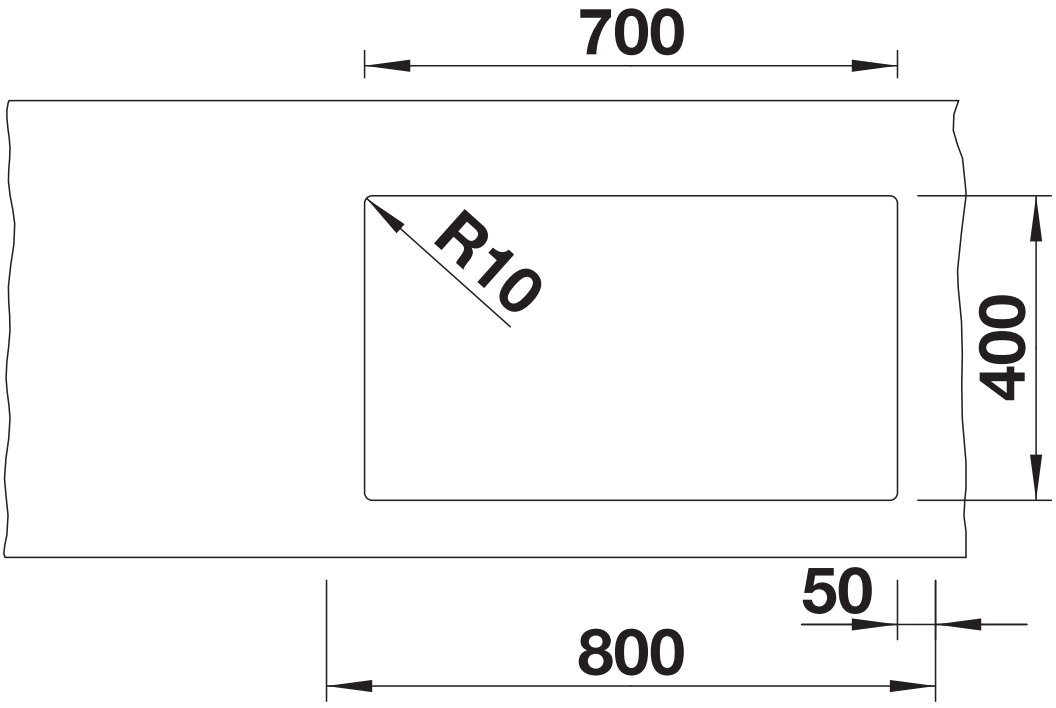

Cut-out

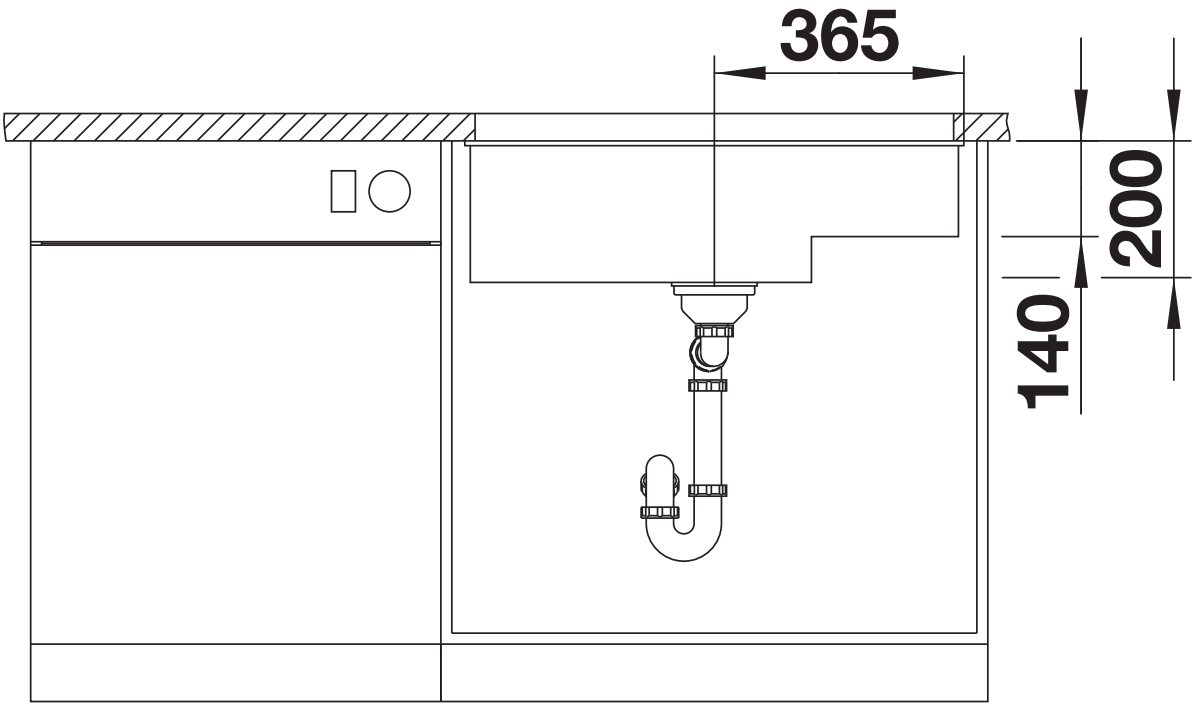

Front view

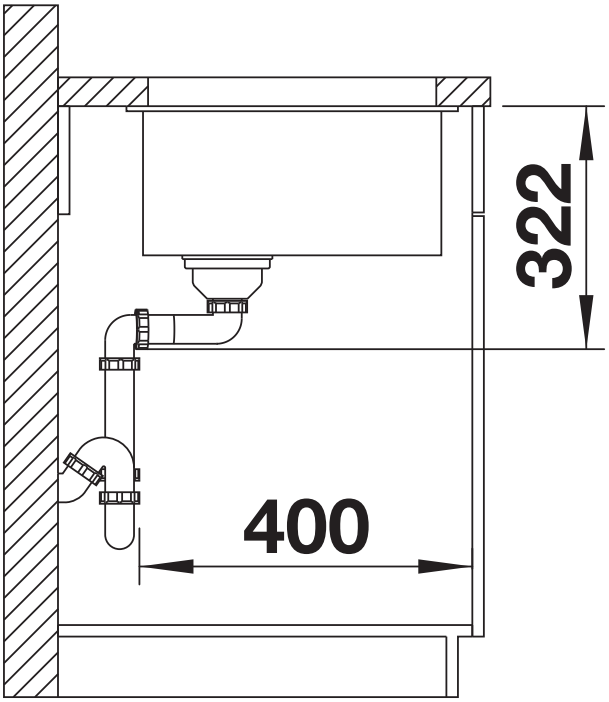

Side view