Product information sheet SUBLINE 340/160-F

Item no. 527161

Benefits



- Bowls for modern kitchen designs
- Timelessly elegant, contoured bowl design
- High-quality features with covered C-overflow and InFino drain system – elegantly integrated and easy-care
- Optional versatile accessories are available

Colours



Available colours:

rock grey
white
anthracite
coffee
black
soft white
volcano grey

SILGRANIT soft white

Planning information

- For worktop thicknesses of 15 mm and over, a space for the overflow must be cut out on the underside.
- Model-related detailed dimensions and drawings can be found with the cut-out information online at www.blanco.com.

Scope of supply

- waste kit with space saving pipe
- waste connection
- 2 x 3 ½'' InFino basket strainer

Details

Min cabinet size	600 mm

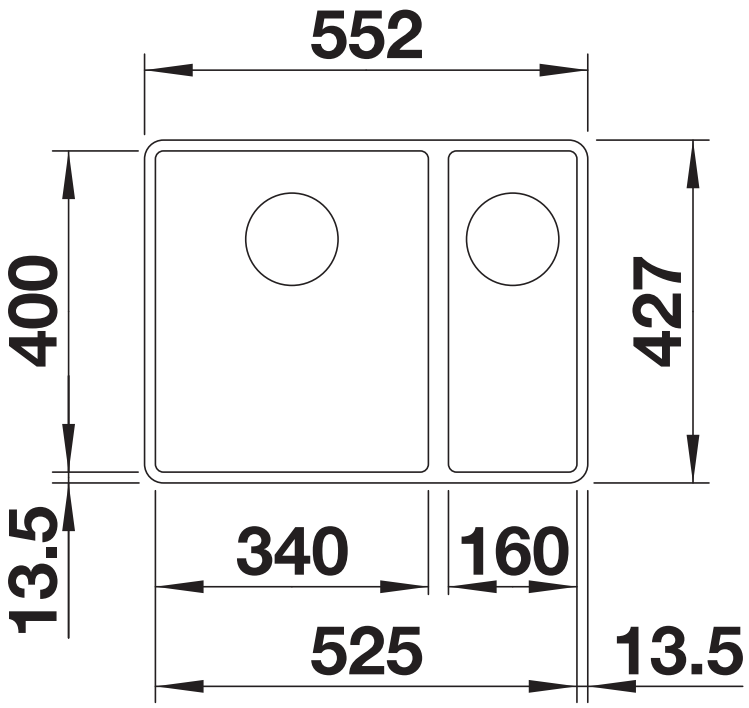

Top view

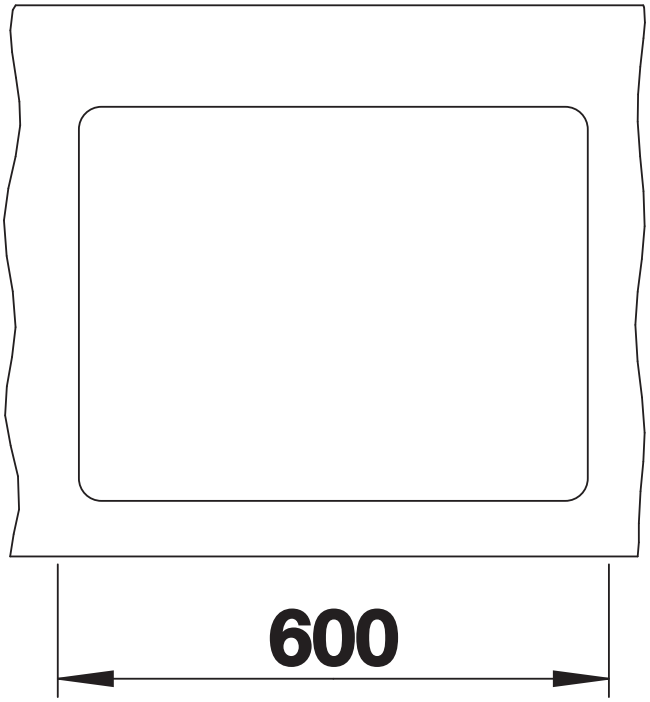

Cut-out

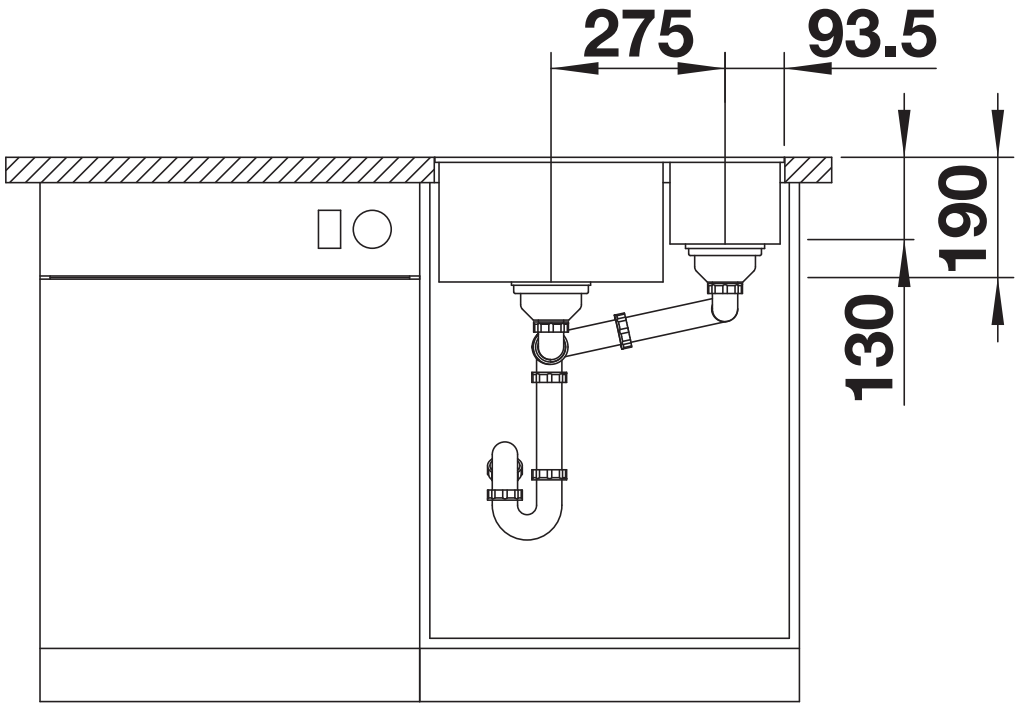

Front view

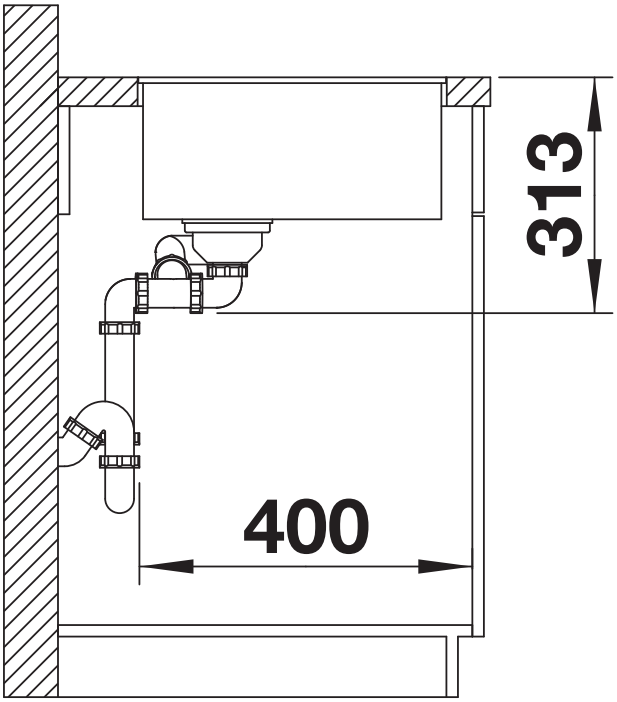

Side view