Product information sheet METRA XL 6 S

Item no. 527123

Benefits



- Young, straight-lined design
- The large capacity of the bowl provides generous room to do the washing up
- Spacious draining area provides a high degree of comfort
- Can be installed reversibly

Colours



Available colours:

black
anthracite
rock grey
volcano grey
white
soft white
tartufo
coffee

SILGRANIT soft white

Planning information

- Cut out size: 980 x 480 x R15
- Universal handing

Scope of supply

- waste kit with space-saving pipe
- 3 ½'' basket strainer with drain remote control (rotary switch)

Details

Min cabinet size 600 mm

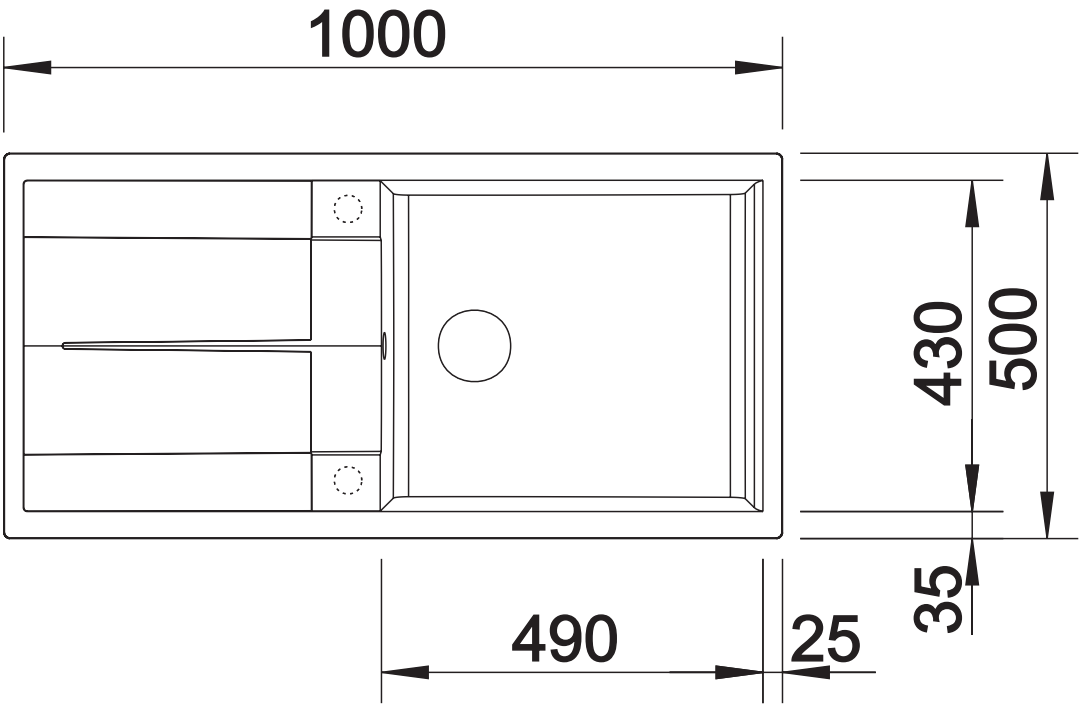

Top view

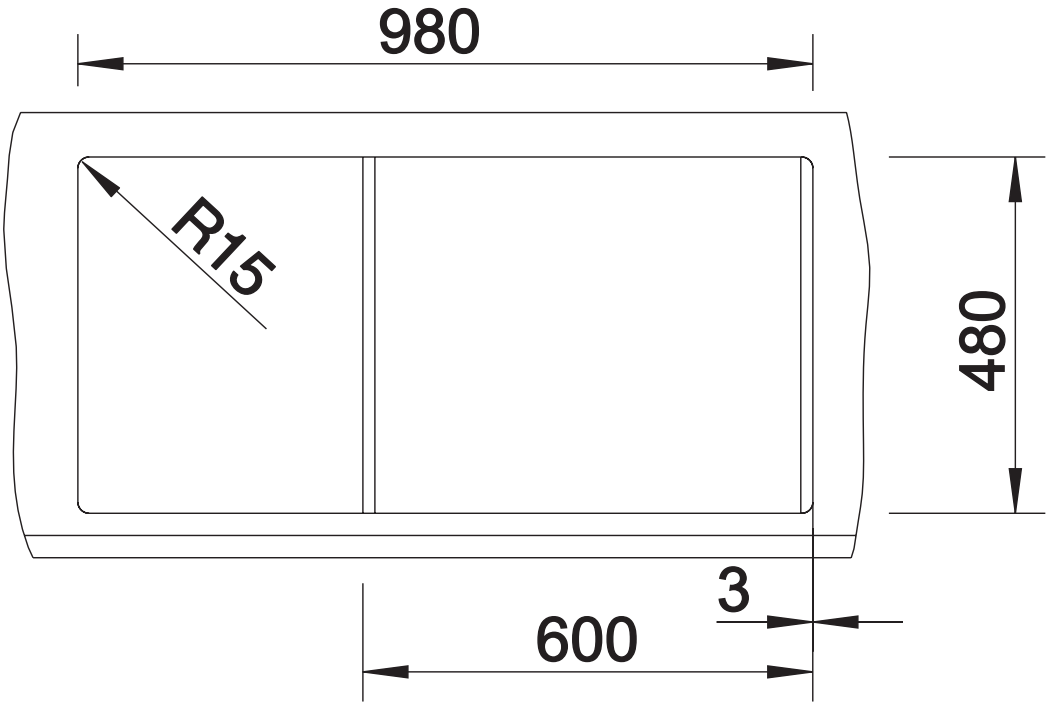

Cut-out

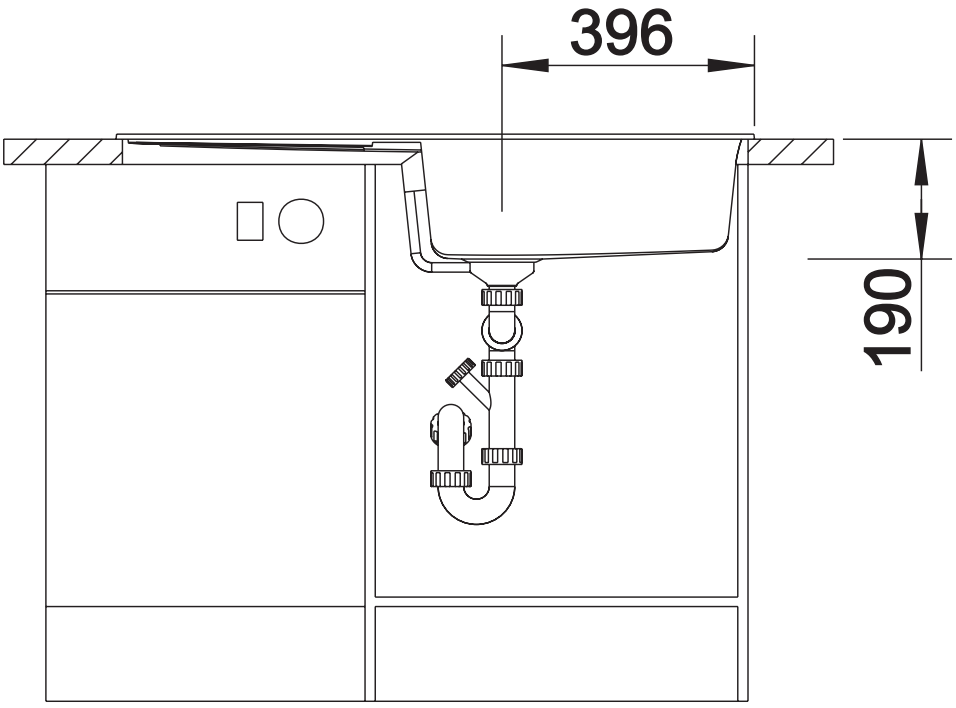

Front view

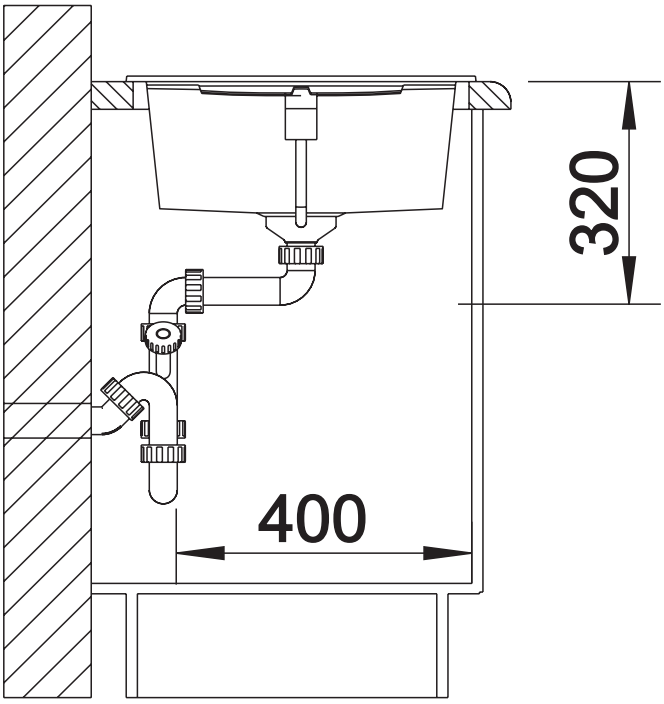

Side view