Product information sheet LEGRA 45 S

Item no. 527085

Benefits



- Classic lines combined with modern functionality
- Spacious main bowl
- Can be installed reversibly

Colours



Available colours:

black
anthracite
volcano grey
white
soft white
coffee

SILGRANIT soft white

Planning information

- Cut out size: 760 x 480 x R15
- Universal handing

Scope of supply

- waste kit with space-saving pipe
- 3 ½'' basket strainer

Details

Min cabinet size 450 mm

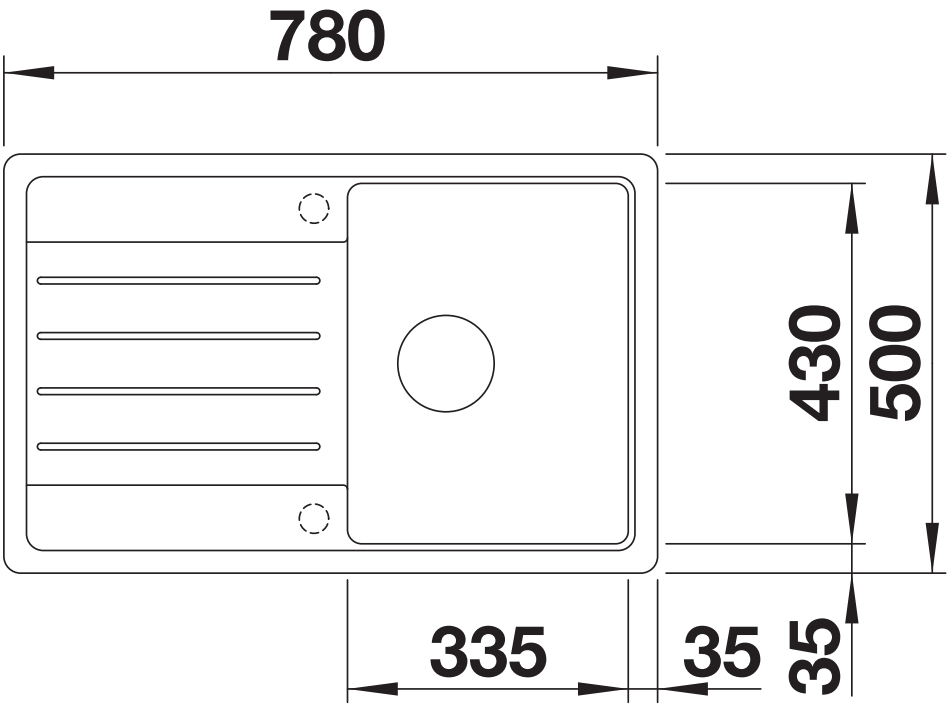

Top view

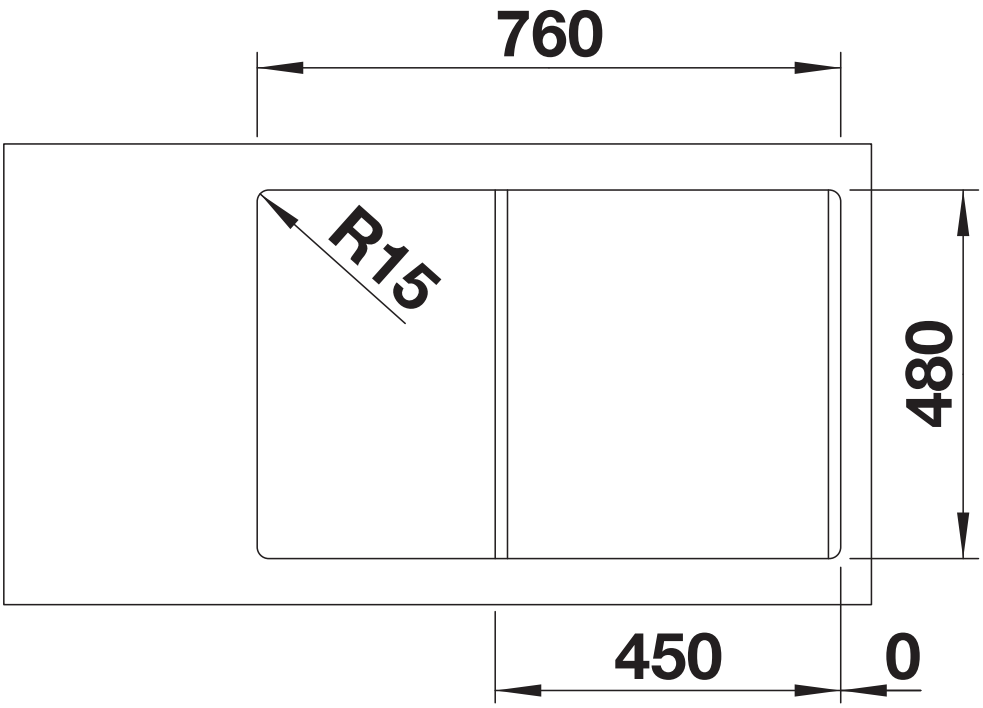

Cut-out

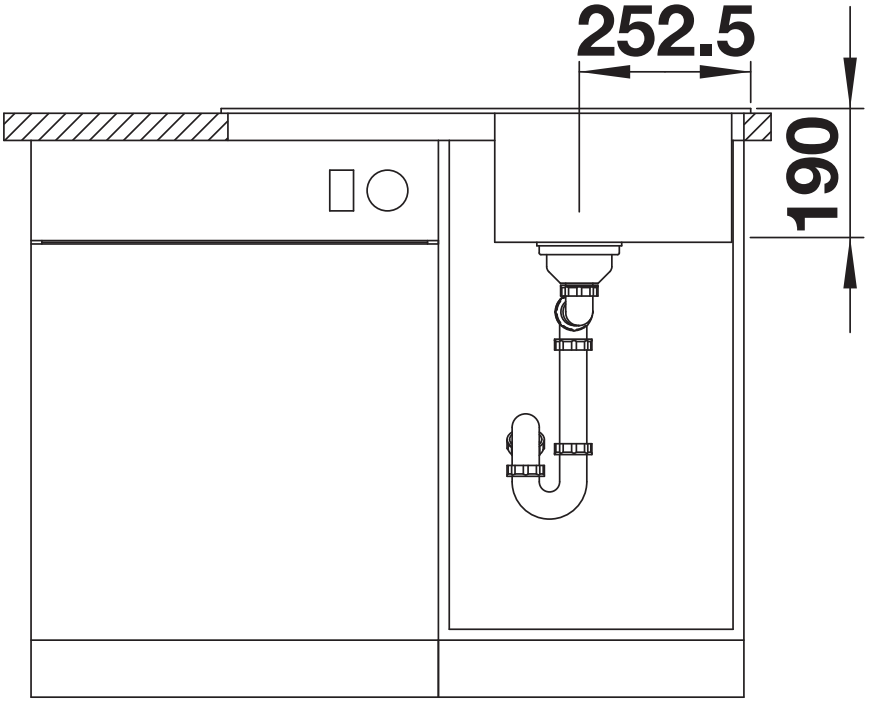

Front view

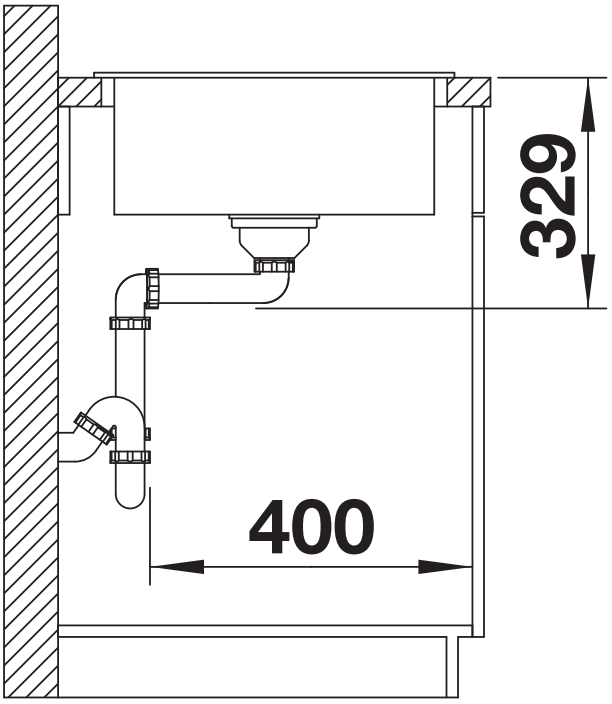

Side view