Product information sheet FARON XL 6 S

Item no. 527082

Benefits



- Traditional style elements in modern interpretations
- Fine profile edge as a design element on the sink rim and chopping board
- Double grooves emphasise the country-house character
- Generous XL bowl
- High-quality features including C-overflow and InFino drainer system
- Can be installed reversibly

Colours



Available colours:

black
anthracite
rock grey
white
tartufo
coffee
soft white
volcano grey

SILGRANIT soft white

Scope of supply

- waste kit with space-saving pipe
- 3 ½'' InFino basket strainer

Details

Min cabinet size	600 mm

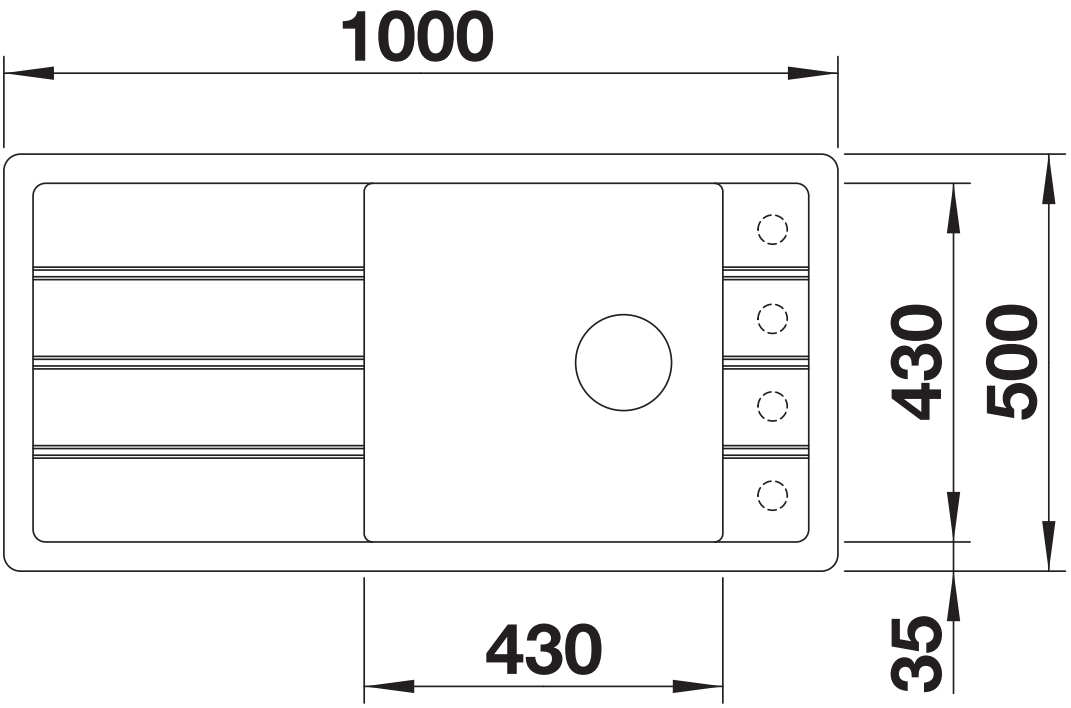

Top view

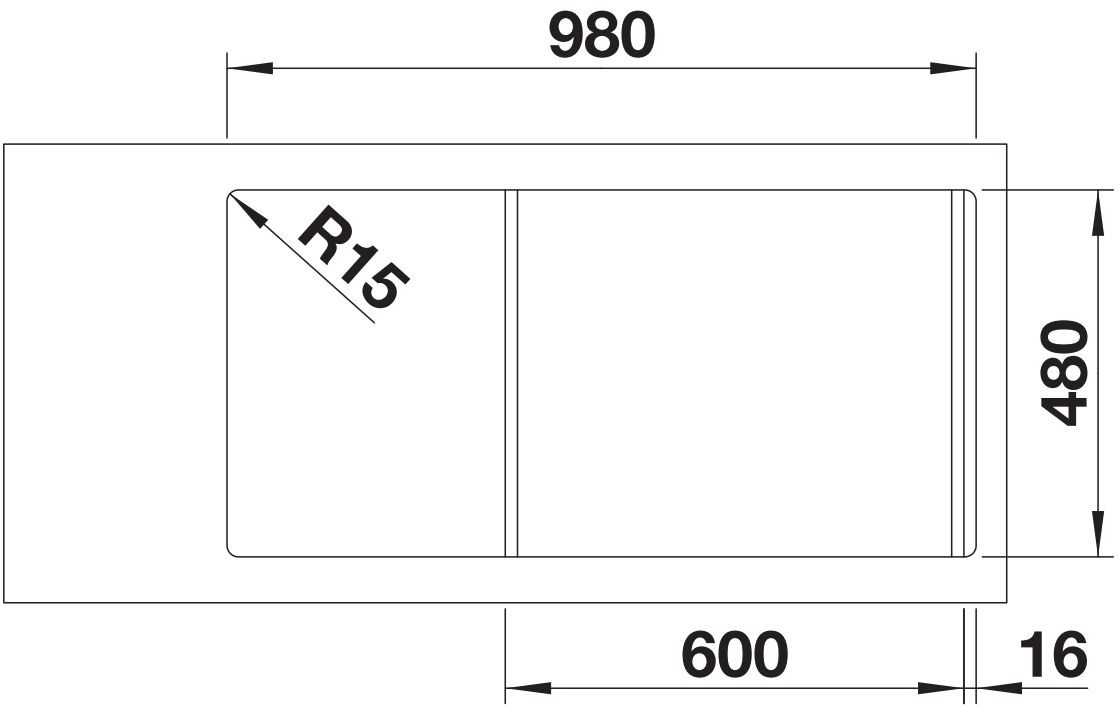

Cut-out

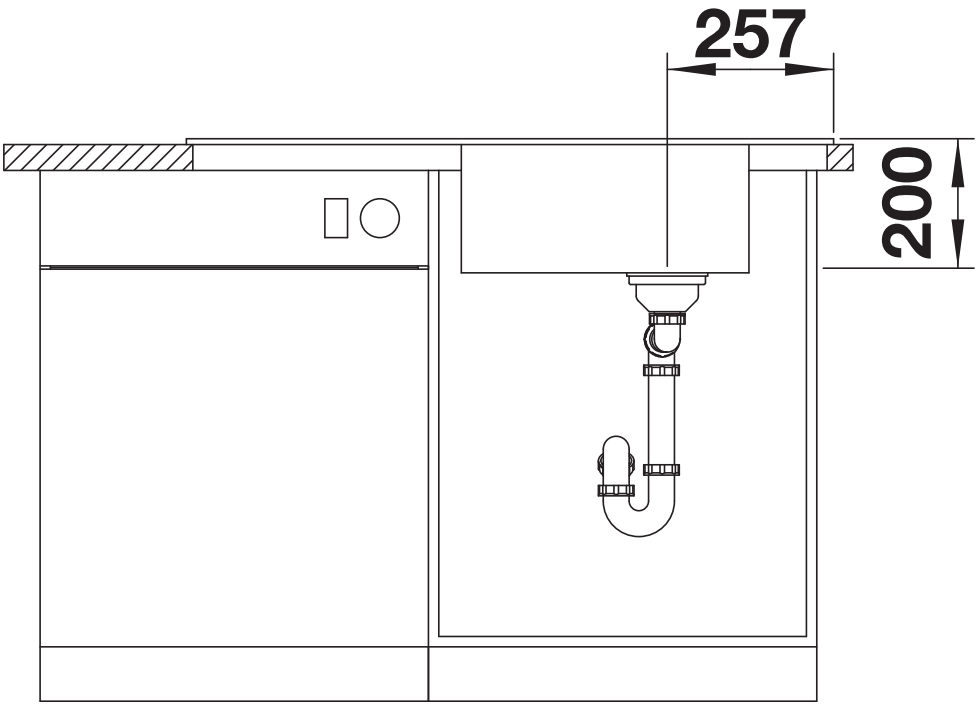

Front view

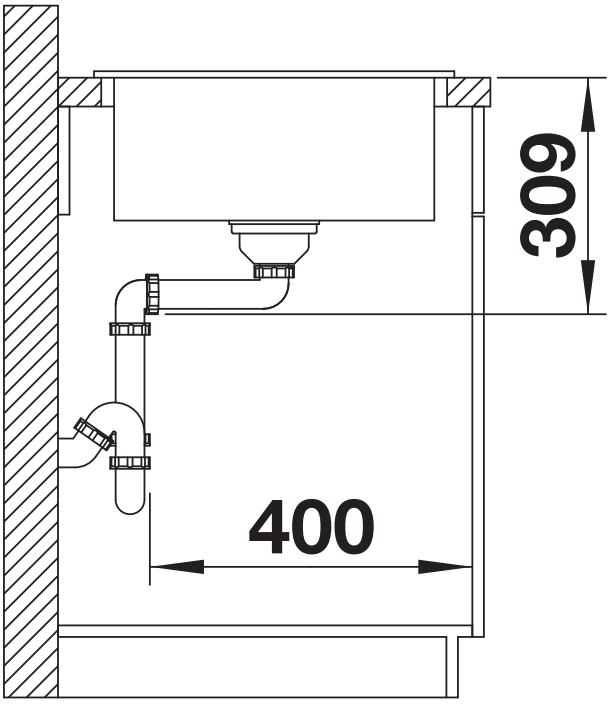

Side view