Product information sheet ETAGON 8

Item no. 527080

Benefits



- Generous staggered bowl with added functionality
- Integrated step creates an additional functional level
- Clever system concept with versatile ETAGON rails
- High-quality features with the covered C-overflow and InFino drain system – elegantly integrated and easy-care
- Installation from above, with elegant, low-profile rim and continuous tap ledge

Colours



Available colours:

white
anthracite
tartufo
coffee
rock grey
black
soft white
volcano grey

SILGRANIT soft white

Scope of supply

- 2 x ETAGON rails in stainless steel
- waste kit with space-saving pipe
- 3 ½'' InFino basket strainer with drain remote control (pop-up
- chrome-plated)

Details

Min cabinet size 800 mm

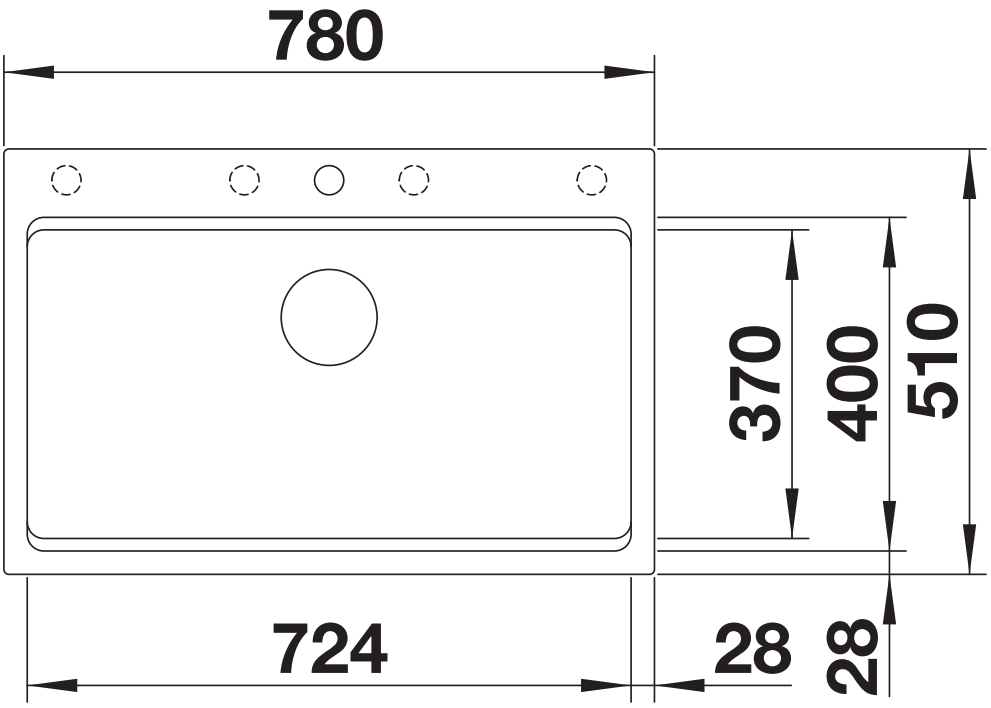

Top view

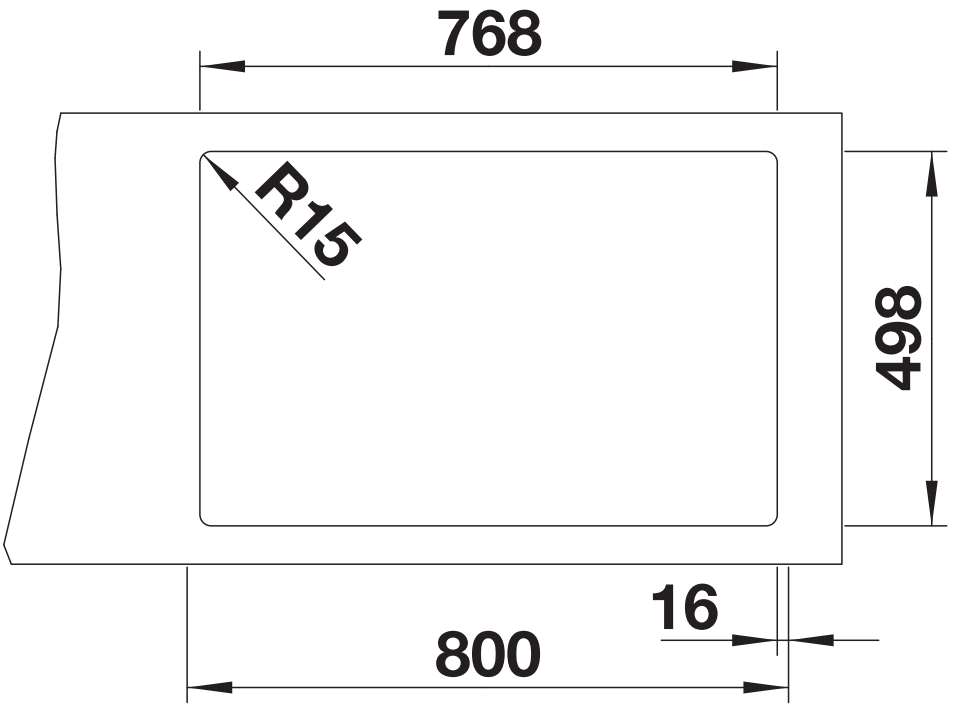

Cut-out

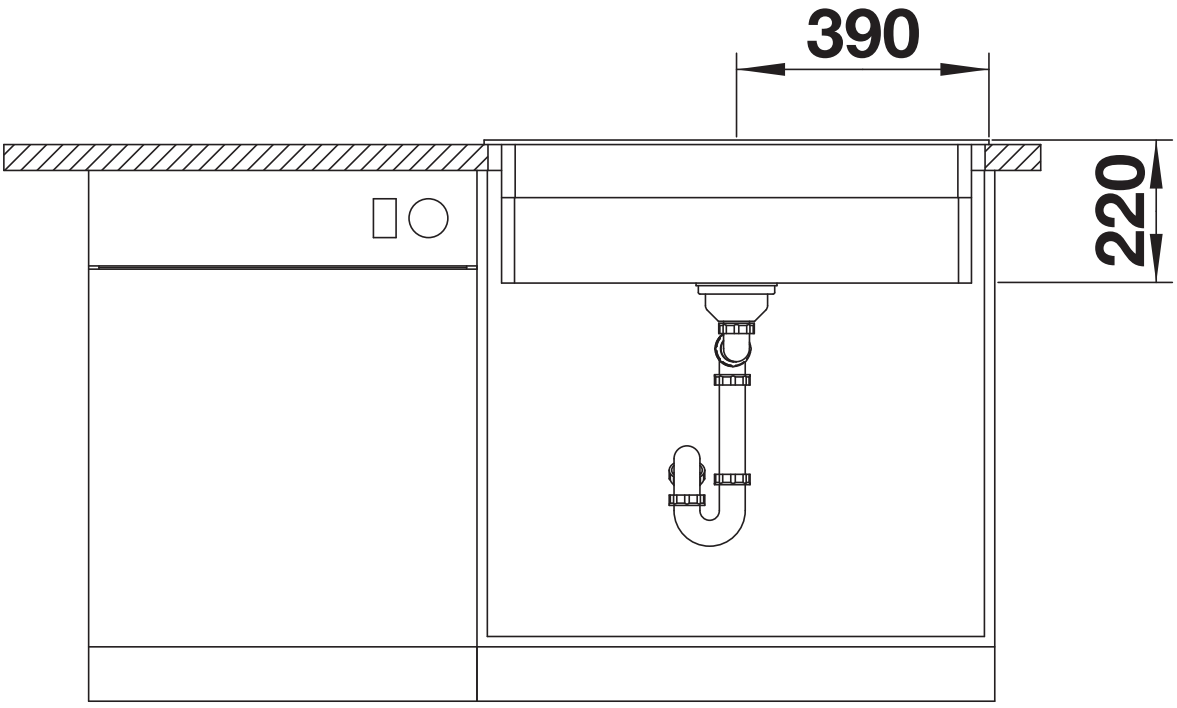

Front view

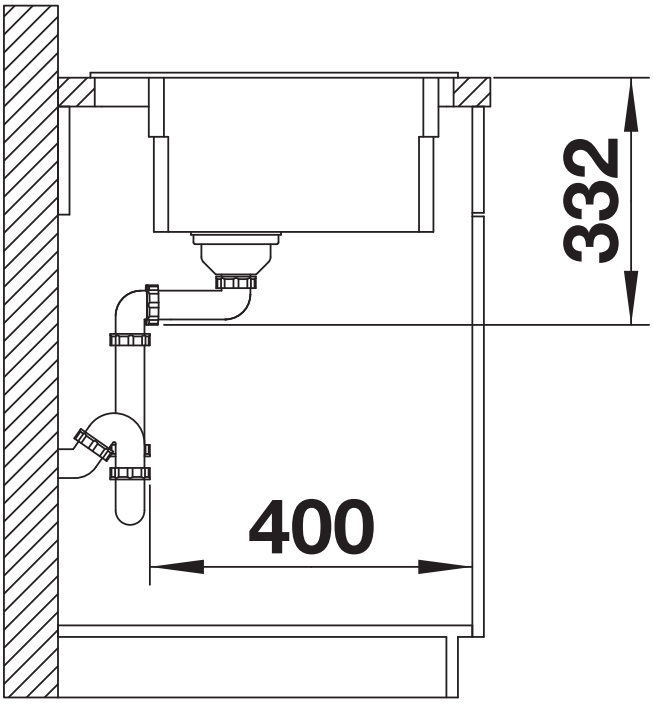

Side view