Product information sheet AVONA-S

Item no. 526928

Benefits



- Exciting interplay between round and rectangular shapes
- Tapering body, gentle incline in spout
- Color version perfectly matched to the coloured sinks and bowls in SILGRANIT
- With extending spray in high-quality

Colours



brass volcano grey

Available colours:

anthracite
rock grey
white
tartufo
black
volcano grey
soft white

Planning information

- Clear spray included

Scope of supply

- 190° swivel spout for greater reach
- Ø 35 mm tap hole required
- With ceramic disk cartridge
- Patented jet regulator for markedly reduced scaling
- Spray made of metal
- Metal-sheathed spray hose
- Hose weight for reliable retraction
- Flexible connector pipes, 500 mm long and ⅜'''' nut
- Stabilisation plate to increase the stability of the tap when fitted in stainless steel sinks
- With non-return valve and thus guaranteed against reflux in accordance with EN 1717

Details

Flow rate	8.62 l
Swivel range	190 °

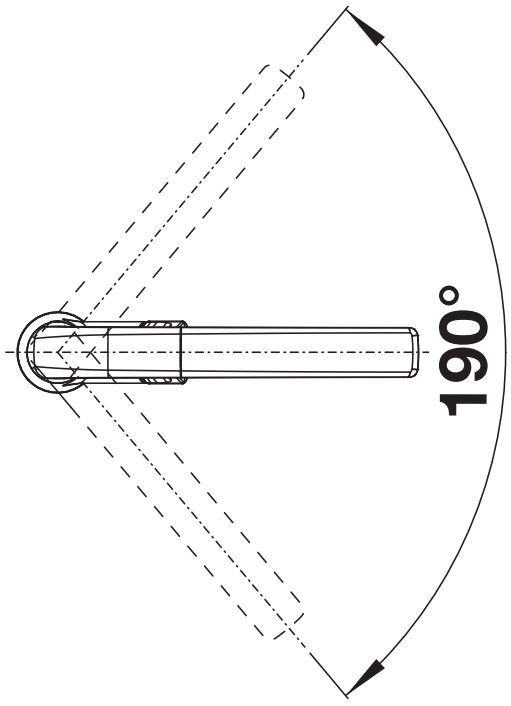

Swivel range

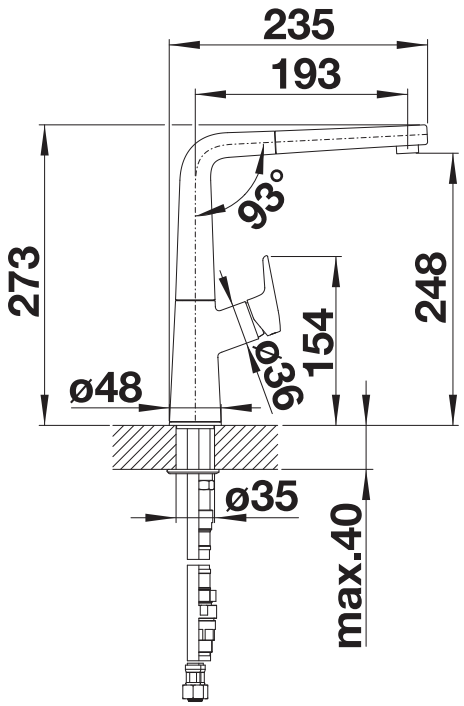

Side view

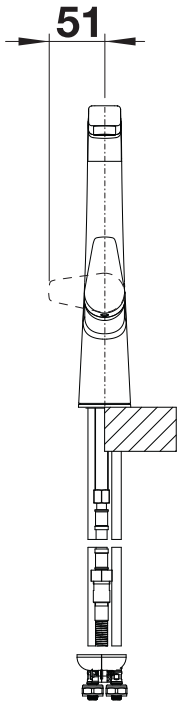

Side view lever