Product information sheet SUPRA 400-IF/A R12

Item no. 526352

Benefits



- Selective range of bowls in a pleasing design
- With integrated tap ledge in just one worktop cut-out
- Elegant IF flat-rim for flushmount and for installation from above
- Practical accessory optional available

Planning information

- Additional drill hole possible. The subsequent drill hole should be carried out by a specialist company.

Scope of supply

- waste kit with space-saving pipe
- 3 ½'' basket strainer
- fixing kit

Details

Min cabinet size	450 mm

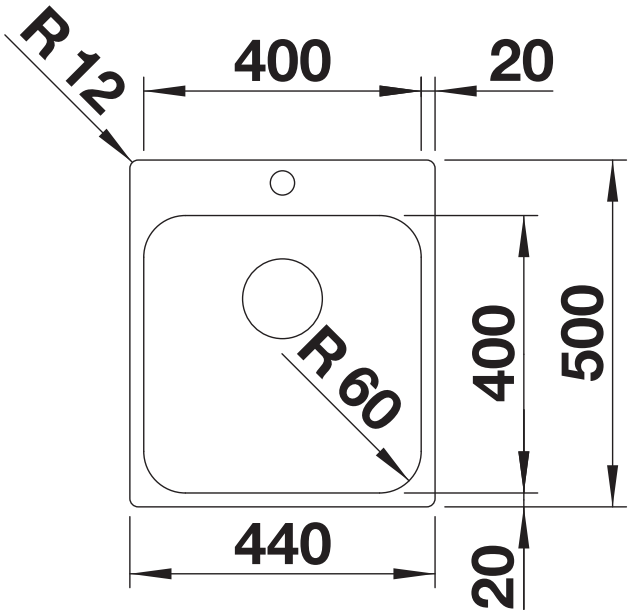

Top view

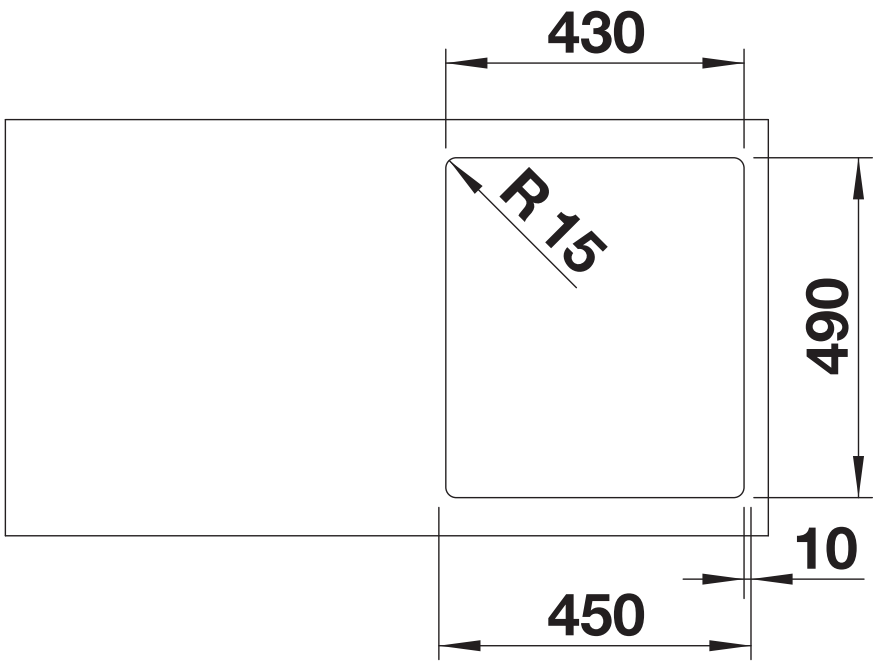

Cut-out

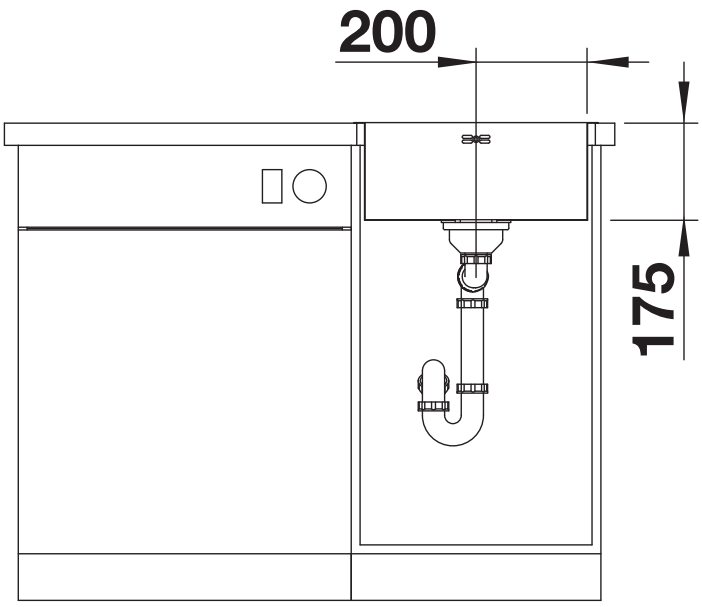

Front view

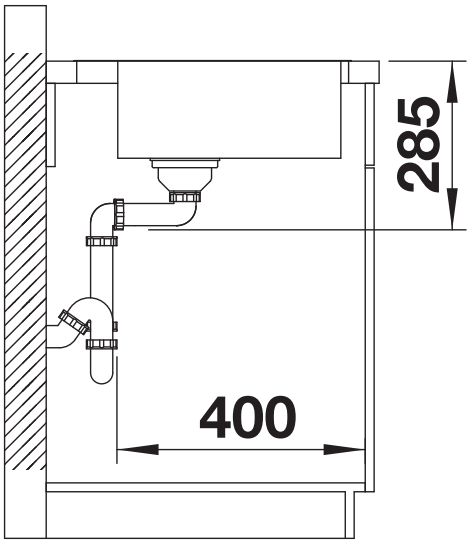

Side view