Product information sheet SOLIS 340/180-U

Item no. 526128

Benefits



- A harmonious interplay between functional and visual elements
- High-quality features with covered C-overflow and InFino drain system – elegantly integrated and easy-care
- Convenient bowl volume and base surface designed for practical use
- Compatible with the BLANCO Multi Match Accessory Set — double bowls enable one bowl to function as a dedicated workstation with the Multi Match Accessory Bundle and Cutting Board, while the second bowl remains free for washing dishes or other tasks

Planning information

- Cut out information supplied with bowls.
- Cut out CNC files also available on www.blanco.co.uk for download
- Please state hand of bowl

Scope of supply

- waste kit with space-saving pipe
- 2 x 3 ½'' InFino basket strainer
- fixing kit

Details

Min cabinet size	600 mm

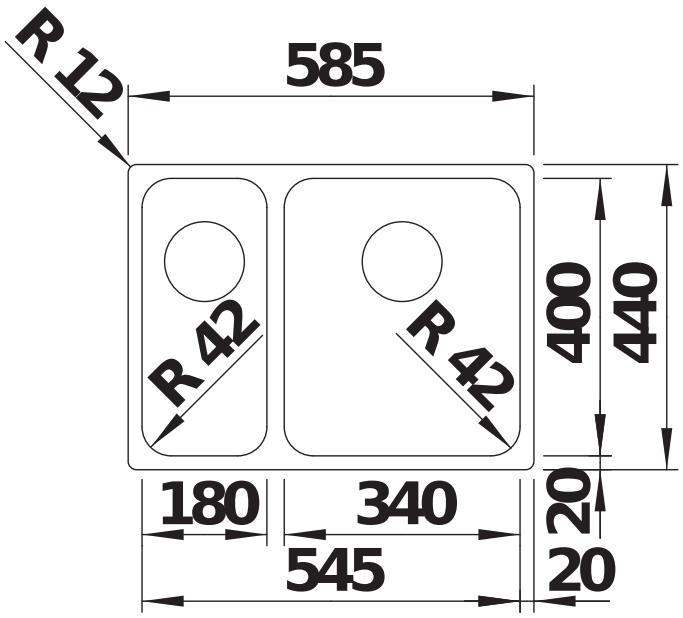

Top view

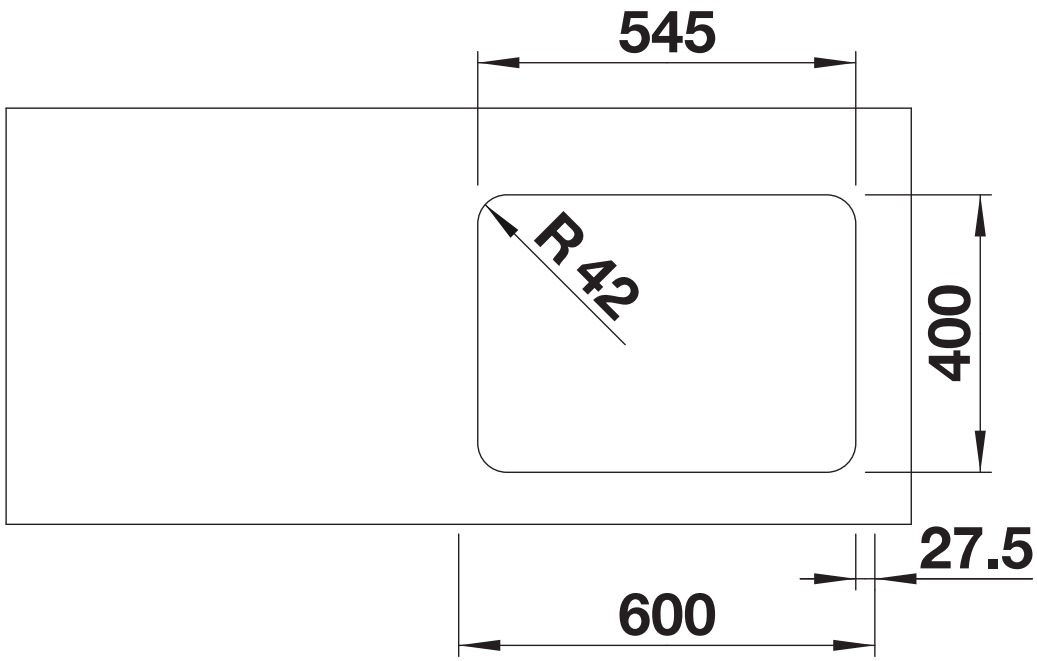

Cut-out

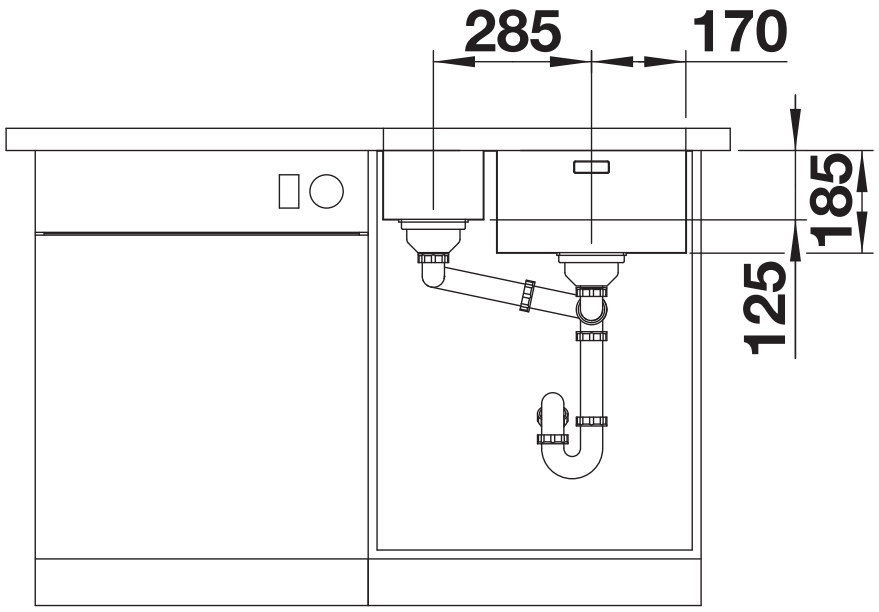

Front view

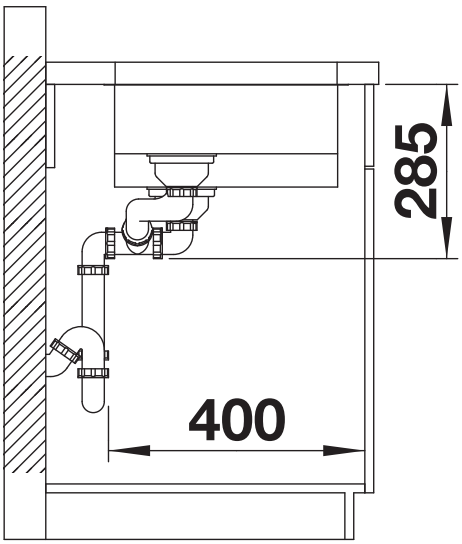

Side view