Product information sheet SOLIS 450-U

Item no. 526120

Benefits



- A harmonious interplay between functional and visual elements
- High-quality features with covered C-overflow and InFino drain system – elegantly integrated and easy-care
- Convenient bowl volume and base surface designed for practical use
- Compatible with the BLANCO Multi Match Accessory Set: SOLIS bowls can be upgraded with the Multi Match Accessory Bundle and Cutting Board, adding integrated in-sink functionality and extra prep capacity where countertop space is limited

Planning information

- Note: Please order drain connections for combinations of two individual bowls separately.

Scope of supply

- waste kit with space-saving pipe
- 3 ½'' InFino basket strainer
- fixing kit

Details

Min cabinet size	500 mm

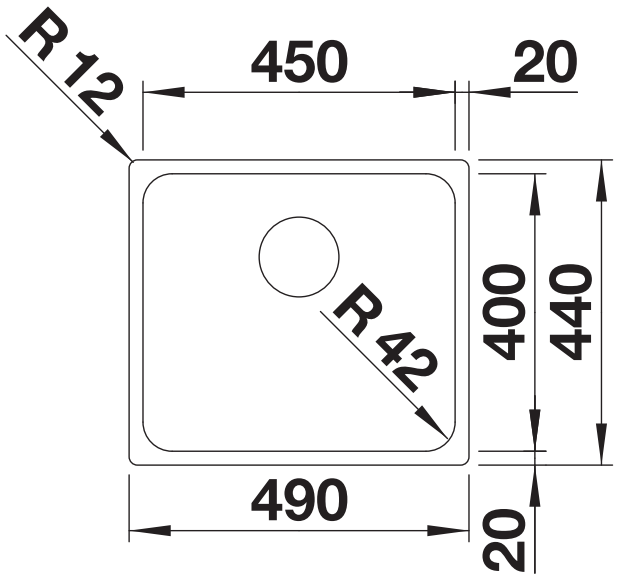

Top view

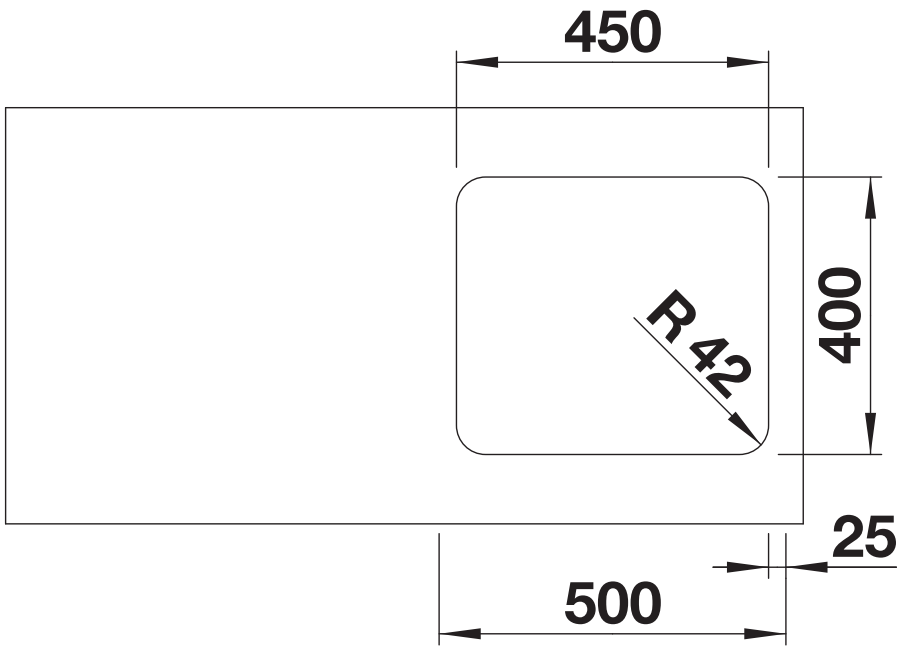

Cut-out

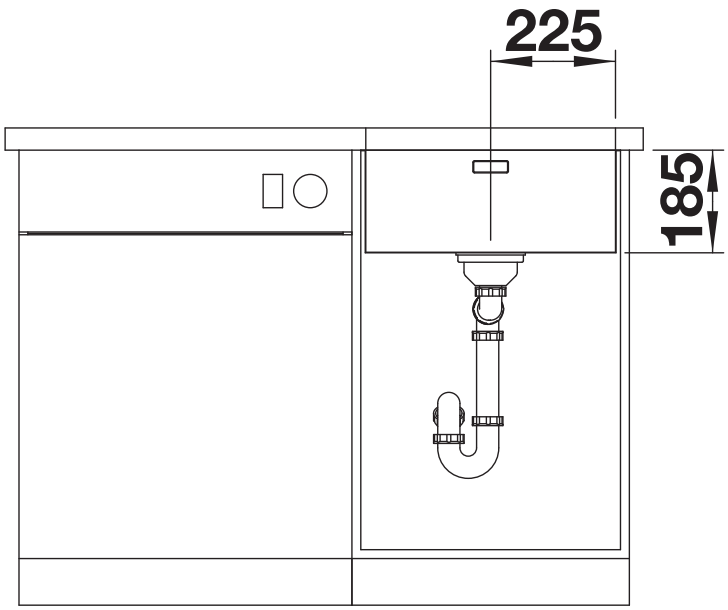

Front view

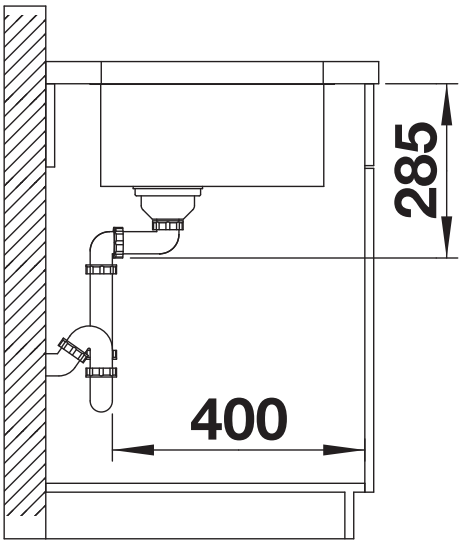

Side view